شرکت مهندسی و پویش ساخت ذوب آهن اصفهان (سهامی خاص)

EPCESCO

شناسه ملی: ۱۴۰۰۴۶۴۸۸۴۵
شماره ثبت: ۵۳۳۷۹

آگهی استعلام اجرای عملیات آرماتور بندی ، قالب بندی و بتن ریزی باترس وال باتری ۲(استعلام شماره ۱۴۰۳۰۰۲۰)

این شرکت در نظر دارداجرای عملیات آرماتور بندی ، قالب بندی ، و بتن ریزی واترس وال باتری ۲ را از طریق استعلام بهاء به پیمانکار واجد شرایط واگذار نماید. متقاضیان می توانند ضمن بازدید از محل و در نظرگرفتن شرایط زیر نسبت به ارائه قیمت پیشنهادی خود حداکثر تا ساعت ۱۰صبح روز چهارشنبه مورخ ۱۴۰۳/۰۴/۲۰ اقدام نمایید. (شماره تماس جهت سوالات فنی :آقای دکتر زهتاب ۰۹۱۳۲۲۹۰۴۵۵)

۱- بهای مورد قرارداد بر اساس صورت وضعیت که به تایید کارفرما رسیده باشد و بر مبنای قیمت پیشنهادی پرداخت می گردد.

۲- درصورت نیاز به هرگونه ماشین آلات جهت اجرای عملیات ، تامین دستگاه و سوخت آن بعهده پیمانکار می باشد.

۳- شرکت در قبول و رد پیشنهادات مختار می باشد.

۴- کلیه کسورات قانونی اعم از بیمه و مالیات و ... بعهده پیمانکار می باشد.

۵- مسئولیت حفظ و نگهداری اموال پروژه از قبیل میلگرد و متریال و ... بعهده پیمانکار می باشد.

۶- برنده استعلام در صورت انعقاد قرارداد می بایست ۵ ٪ مبلغ پیشنهاد را به عنوان سپرده حسن اجرای تعهدات به نام شرکت واریز نماید.

۷- کلیه تجهیزات شامل قالب ، دستگاه های خم و برش آرماتور و سایر تجهیزات مرتبط بعهده پیمانکار می باشد.

- پیشنهاد قیمت بایستی با امضاء و مهر یا اثر انگشت شرکت کننده و در پاکت در بسته ارائه گردد.
- اجرای آرماتور بندی با میلگرد آجدار از نوع AII یا AIII با قطر های زیر ۲۰ میلیمتر مبلغ پیشنهادی جهت ۳ **تن**..... ریال.
- اجرای آرماتور بندی با میلگرد آجدار از نوع AII یا AIII با قطر های ۲۰ و بالای ۲۰ میلیمتر مبلغ پیشنهادی جهت ۷ **تن**..... ریال.
-
- اجرای قالب بندی جهت **۳۰۰ مترمربع**.....ریال.
- اجرای قطعات مدفون جهت **۴ تن** .....ریال.
- اجرای بتن اصلی جهت **۱۰۰ مترمکعب** .....ریال.

نام شرکت کننده:..... شماره اقتصادی یا کد ملی : .....

آدرس : ..... تلفن : .....

امضاء و مهر یا اثر انگشت

دفتر مرکزی: اصفهان، بلوار شفق، مجموعه اداری ذوب آهن، طبقه همکف
دفترکارخانه: اصفهان، کارخانه ذوب آهن، ساختمان نبوت
تلفکس: ۱-۰۳۱۵۲۵۷۶۱۹۰|۰۳۱۵۲۵۷۶۰۷۰
کدپستی: ۸۱۷۸۶۴۷۶۵۸
www.epcesco.com
info@epcesco.com

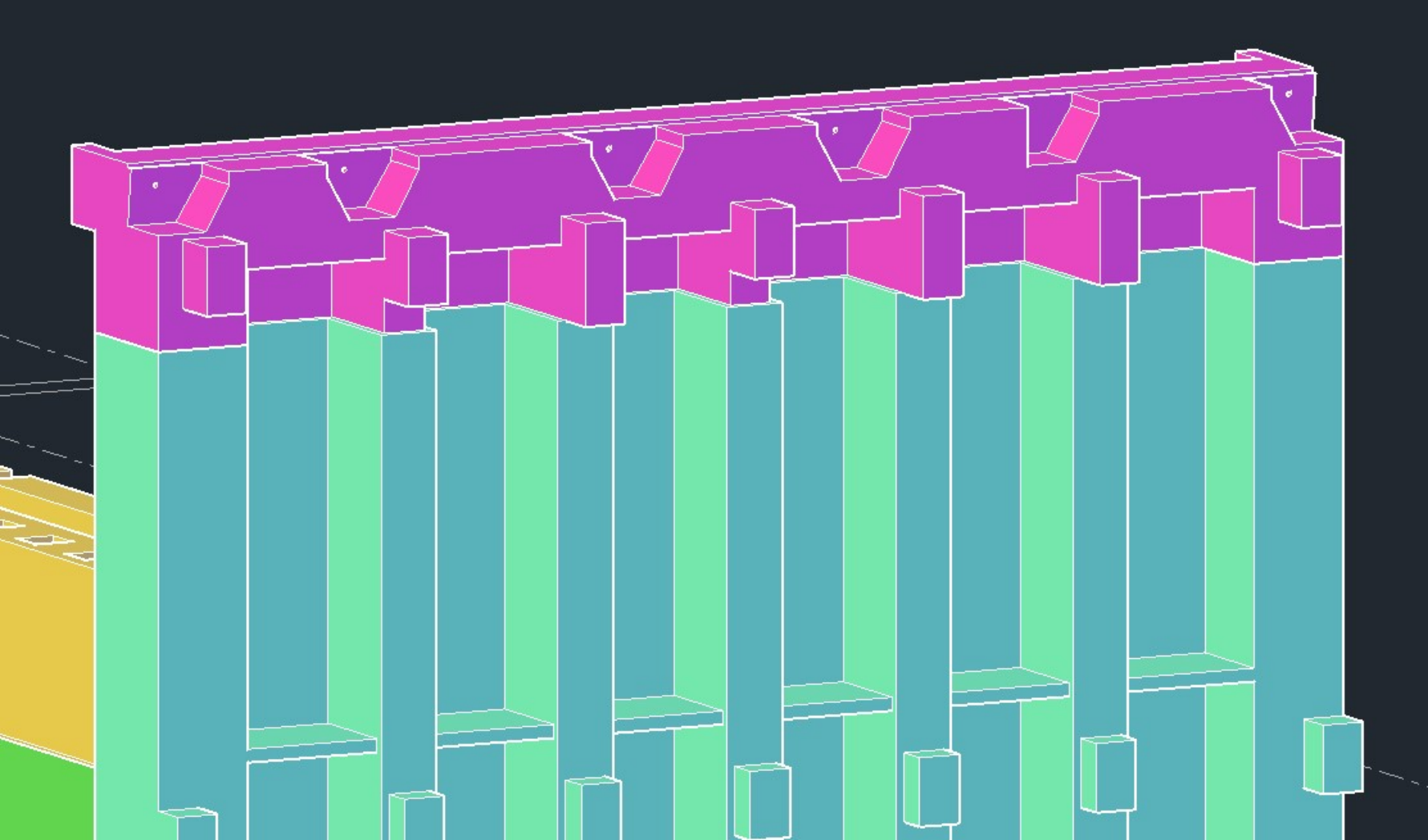

To dismantle existing buttress area without disturbance of re-bars. The concrete surface shall be blown with compressed air and moistured. After installation of inserted article L150x150x12 remaining gaps shall be filled with heat-resistant concrete (minimum specified compressive strength fc'=21 MPa in accordance with ACI 318-19) on fine aggregate

Участок существующего контрфорса разобрать без нарушения арматуры. Поверхность бетона продуть сжатым воздухом и увлажнить. После установки закладного изделия L150x150x12 оставшиеся зазоры заполнить жаростойким бетоном (минимальная заданная прочность на сжатие fc'=21 МПа в соответствии с ACI 318-19) на мелком заполнителе

Inserted article L150x150x12 in a new reinforced concrete beam

Закладное изделие L150x150x12 в новой ж.б. балке

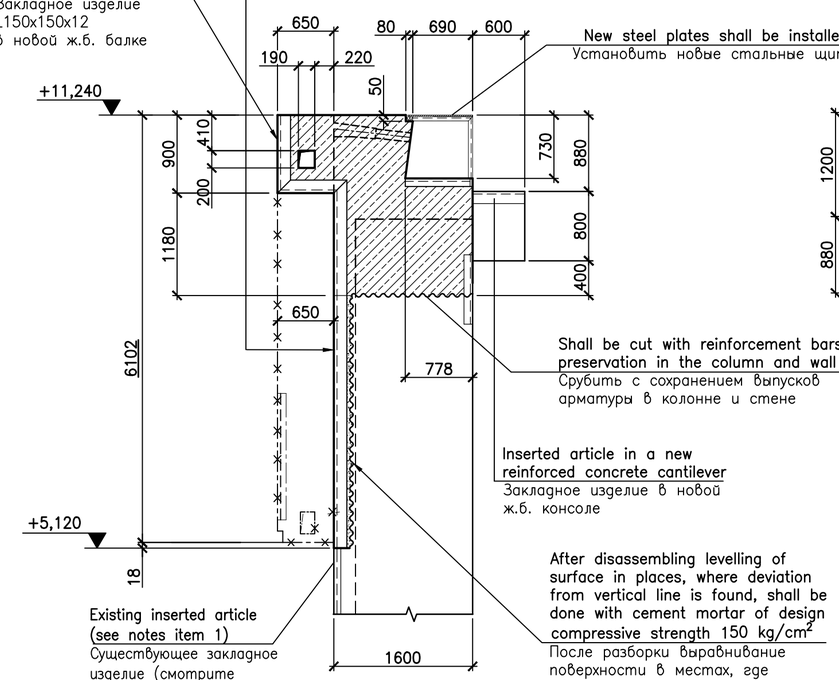

New steel plates shall be installed

Установить новые стальные щиты

Shall be cut with reinforcement bars preservation in the column and wall

Срубить с сохранением выпусков арматуры в колонне и стене

Inserted article in a new reinforced concrete cantilever

Закладное изделие в новой ж.б. консоле

After disassembling levelling of surface in places, where deviation from vertical line is found, shall be done with cement mortar of design compressive strength 150 kg/cm^2

После разборки выравнивание поверхности в местах, где обнаружатся отклонения от вертикали, производить цементно-песчаным раствором с расчетным сопротивлением на сжатие 150 кг/см^2

Existing inserted article (see notes item 1)

Существующее закладное изделие (смотрите примечание п.1)

SECTION / РАЗРЕЗ 4-4

Inserted articles in a new reinforced concrete beam

Закладные изделия в новой ж.б. балке

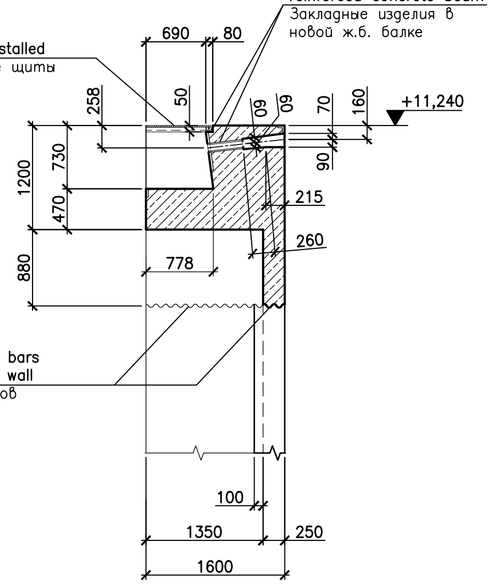

SECTION / РАЗРЕЗ 5-5

NOTES:

1. This project has been elaborated on the assumption of suitable technical condition of existing structures and inserted articles to be used for future operation. To restore corrosion protection of existing inserted articles in accordance with instructions on sheet -004.
2. When disassembling, care should be taken to prevent disturbance of structures that are not subject to dismantling.

ПРИМЕЧАНИЯ:

1. Данный проект разработан в предположении пригодного технического состояния используемых для дальнейшей эксплуатации закладных изделий. Восстановить антикоррозионную защиту существующих закладных изделий в соответствии с указаниями на листе -004.
2. При разборке соблюдать меры предосторожности, чтобы не нарушить конструкции, не подлежащие разборке.

SYMBOLS:

УСЛОВНЫЕ ОБОЗНАЧЕНИЯ:

Structures to be dismantled (see notes item 2)

Разбираемые конструкции (смотрите примечание п.2)

FOR APPROVAL

The contents of this document or any part of it shall remain the property of SE "GIPROKOKS", therefore it is strictly forbidden to use it (in whole or partially) without written permission from SE "GIPROKOKS" for copying, processing, reusing, transferring to third parties, for other facilities and purposes

REV. No	DATE	DESCRIPTION	REV.BY	CHK.BY

SUBMITTED FOR | APPROVAL | REFERENCE

E.S.Co

EMPLOYER
BHILAI ENGINEERING CORPORATION LIMITED

CONTRACTOR
SE"GIPROKOKS"

DSGN	Kinash	
DRWN	Korniienko	
CHECKED	Kinash	
APPROVED	Golubenko	
	Kogtin	05.2023

Coke Oven No.2 Reconstruction.
Basic engineering (BE).
Coke Oven battery foundations. Buttresses.
Plans. Sections
Фундаменты коксовой батареи.
Контрфорсы. Планы. Разрезы

DRG. SIZE	A2	SCALE	1:50	SHEET	2 of 2	REV.	00

CONTR. DRG. NO.: 1345313-AC л.6

PROJECT DRG. NO.: B-ES-CM-CO-10-13-CV-006-A-0

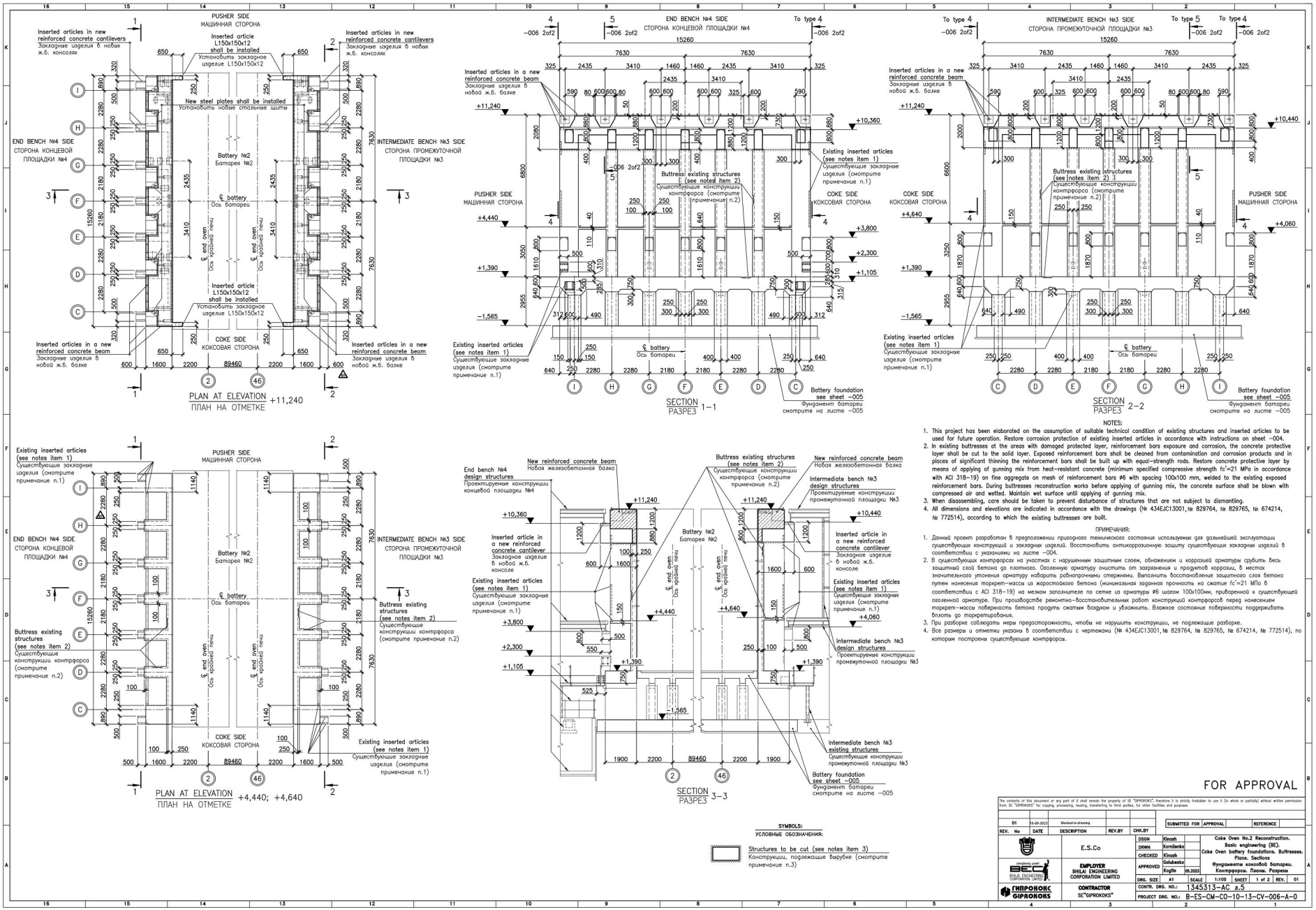

NOTES:

1. This project has been elaborated on the assumption of suitable technical condition of existing structures and inserted articles to be used for future operation. Restore corrosion protection of existing inserted articles in accordance with instructions on sheet –004.
2. In existing buttresses at the areas with damaged protected layer, reinforcement bars exposure and corrosion, the concrete protective layer shall be cut to the solid layer. Exposed reinforcement bars shall be cleaned from contamination and corrosion products and in places of significant thinning the reinforcement bars shall be built up with equal–strength rods. Restore concrete protective layer by means of applying of gunning mix from heat–resistant concrete (minimum specified compressive strength fc'=21 MPa in accordance with ACI 318–19) on fine aggregate on mesh of reinforcement bars Ø6 with spacing 100x100 mm, welded to the existing exposed reinforcement bars. During buttresses reconstruction works before applying of gunning mix, the concrete surface shall be blown with compressed air and wetted. Maintain wet surface until applying of gunning mix.
3. When disassembling, care should be taken to prevent disturbance of structures that are not subject to dismantling.
4. All dimensions and elevations are indicated in accordance with the drawings (№ 434EJC13001,№ 829764, № 829765, № 674214, № 772514), according to which the existing buttresses are built.

ПРИМЕЧАНИЯ:

1. Данный проект разработан в предположении пригодного технического состояния используемых для дальнейшей эксплуатации существующих конструкций и закладных изделий. Восстановить антикоррозионную защиту существующих закладных изделий в соответствии с указаниями на листе –004.
2. В существующих контрфорсах на участках с нарушенным защитным слоем, обнажением и коррозией арматуры срубить весь защитный слой бетона до плотного. Оголенную арматуру очистить от заржавления и продуктов коррозии, в местах значительного утонения арматуру наварить равнопрочными стержнями. Выполнить восстановление защитного слоя бетона путем нанесения торкрет–массы из жаростойкого бетона (минимальная задонная прочность на сжатие fc'=21 МПа в соответствии с ACI 318–19) на мелком заполнителе по сетке из арматуры Ø6 шагом 100x100мм, приваренной к существующей оголенной арматуре. При производстве ремонтно–восстановительных работ конструкций контрфорсов перед нанесением торкрет–массы поверхность бетона продуть сжатым воздухом и увлажнить. Влажное состояние поверхности поддерживать вплоть до торкретирования.
3. При разборке соблюдать меры предосторожности, чтобы не нарушить конструкции, не подлежащие разборке.
4. Все размеры и отметки указаны в соответствии с чертежами (№ 434EJC13001,№ 829764, № 829765, № 674214, № 772514), по которым построены существующие контрфорсы.

FOR APPROVAL

The contents of this document or any part of it shall remain the property of SE "GIPROKOKS", therefore it is strictly forbidden to use it (in whole or partially) without written permission from SE "GIPROKOKS" for copying, processing, reusing, transferring to third parties, for other facilities and purposes.

REV.	No	DATE	DESCRIPTION	REV.BY	CHK.BY	SUBMITTED FOR	APPROVAL	REFERENCE
	01	18.06.2023	Marked in drawing					

E.S.Co	DSGN	Kinash	Coke Oven No.2 Reconstruction. Basic engineering (BE). Coke Oven battery foundations. Buttresses. Plans. Sections. Фундаменты коксовой батареи. Контрфорсы. Планы. Разрезы
	DRWN	Karnilenko	
	CHECKED	Kinash	
EMPLOYER BHILAI ENGINEERING CORPORATION LIMITED	APPROVED	Golubenko / Kogtin 05.2023	
	DRG. SIZE	A1	SCALE 1:100 / SHEET 1 of 2 / REV. 01
CONTRACTOR SE"GIPROKOKS"	CONTR. DRG. NO.:	1345313–AC л.5	
	PROJECT DRG. NO.:	B–ES–CM–CO–10–13–CV–006–A–0	

ГИПРОКОКС GIPROKOKS

No.-772530 ET NO. K- 33)

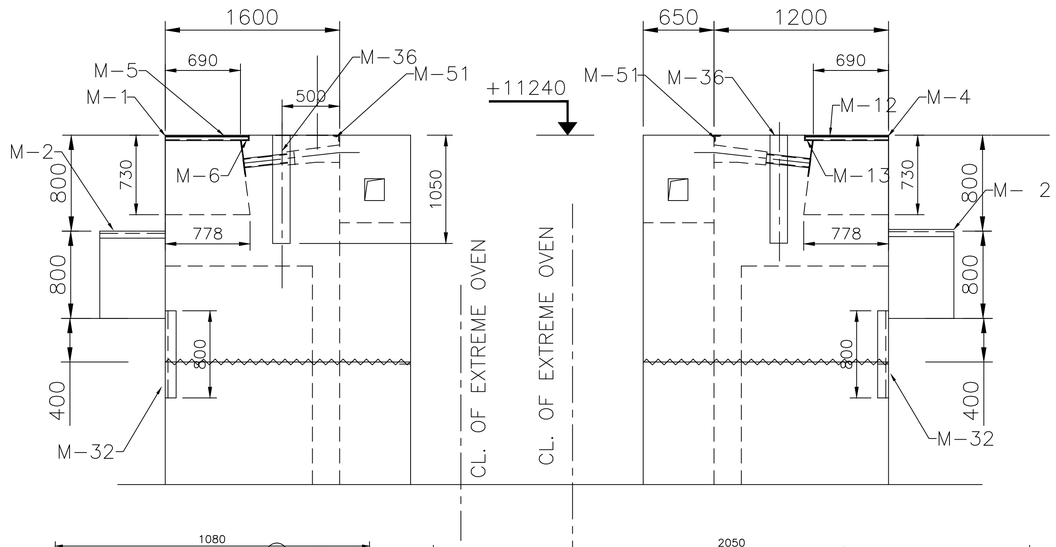

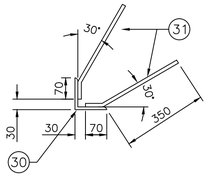

SECTION X-X
(SCALE 1:10)

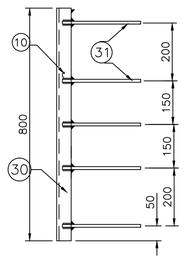

DETAIL-M-32

TABLE FOR METAL COMPONENTS SPECIFICATION							
MARK & QTY.	ITEM NO.	DETAIL SPECIFICATION	LENGTH mm	QTY	WEIGHT KG	WEIGHT KG UNIT	WEIGHT KG TOTAL
M-15 (n=6)	2	-30x5	550	3	0.90	57.90	355.00
	7	Checkered plote 6 thk.	1.02m ²	1	55.40		
	8	-30x5	1280	1	1.60		
M-16 (n=6)	9	[Channel 80X45	1350	1	11.70	26.40	158.40
	5	[Channel 80X45	770	2	13.40		
	6	₹8	150	15	1.30		
M-19 (n=2)	27	Channel 80X45	1000	1	8.64	15.20	31.50
	28	Channel 80X45	770	1	6.66		
	6	₹8	150	8	0.80		
M-21 (n=2)	9	L80x80x8	1085	1	9.80	11.80	23.60
	10	₹10	360	8	2.00		
M-22 (n=4)		L80x80x8	2050	1	19.50	22.30	89.20
	10	₹10	360	12	2.80		
M-23 (n=2)		L80x80x8	1350	1	13.50	15.50	31.00
	10	₹10	360	78	2.00		
M-24 (n=2)	9	L80x80x8	1550	1	13.70	15.70	31.40
	10	₹10	360	78	2.00		
M-32 (n=4)	30	L100x100x10	800	1	14.00	17.00	68.00
	31	₹10	420	10	3.00		
M-34 (15m)	29	Ang. 150x150x12	1000	15	27.30	31.30	470.00
	2	₹12	4500	15	4.00		
M-35 (n=2)	5	-300x10	500	1	11.77	14.74	29.48
	2	₹12	370	9	0.33		
M-36 (n=4)	32	-150x10	1975	1	16.0	19.80	80.00
	33	₹10	770	8	3.80		
M-38 (n=2)	35	MS rod ø16	1000	2	1.58	1.58	2.20
M-39 (n=4)	35	BOLT M16 WITH NUT & WASHER	400	1	0.7	0.7	2.80
M-40 (n=4)	36	PIPE 48.3x3.68	40	1	0.2	0.31	1.20
		ø40x4 ms Plate	60	1	0.11		
M-51 (n=30.0 -M)	13	L100x100x10	1000	1	15.10	15.33	460.0
	14	₹10	370	10	0.23		

TABLE FOR METAL COMPONENTS SPECIFICATION							
MARK & QTY.	ITEM NO.	DETAIL SPECIFICATION	LENGTH mm	QTY	WEIGHT KG	WEIGHT KG UNIT	WEIGHT KG TOTAL
M-1 (n=2)	1	L50x50x5	730	1	3.20	6.80	13.70
	2	L50x50x5	770	1	3.60		
M-2 (n=14)	4	L80x80x10	600	1	5.00	5.62	158.0
	5	₹10	350	3	0.62		
M-3 (n=4)	7	L50x50x6	770	1	3.20	3.80	14.50
	8	₹8	250	4	0.60		
M-4 (n=2)	23	L50x50x6	730	1	3.20	6.80	13.70
	24	L50x50x6	770	1	3.60		
M-5 (n=2)	9	Stiffener, 30x5	490	3	0.6	41.4	82.8
	10	Checkered plate 6 thk.	0.77m ²	1	38.5		
	21	Stiffener, 30x5	940	1	1.1		
M-6 (n=2)	11	[Channel 80X45	1080	1	9.75	16.3	32.6
	12	[Channel 80X45	770	2	4.2		
	13	₹8	150	11	1.20		
M-7 (n=12)	14	Pipe ø122x5	395	1	6.4	6.4	76.8
M-10 (n=12)	19	₹10	310	16	0.2	23.9	286.8
	20	-470x10	560	1	20.7		
M-12 (n=2)	1	Checkered plote 6 thk.	0.77m ²	1	38.10	40.00	80.00
	2	-30x5	550	3	0.68		
	3	-30x5	895	1	1.12		
M-13 (n=2)	4	Channel 80X45	1000	1	8.64	20.84	42.00
	5	Channel 80X45	770	1	13.40		
	6	₹8	150	8	0.80		
M-14 (n=2)	1	Checkered plote 6 thk.	0.77m ²	1	38.10	40.20	80.50
	2	-30x5	550	3	0.88		
	3	-30x5	895	1	1.12		

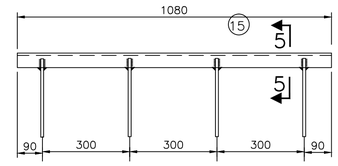

DETAIL OF M-21

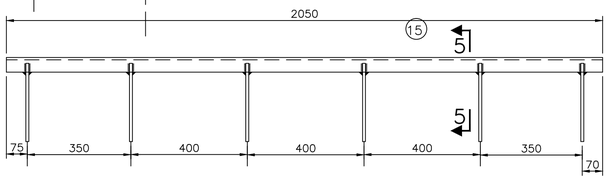

DETAIL OF M-22

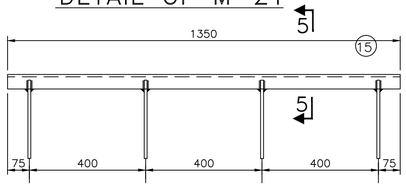

DETAIL OF M-23

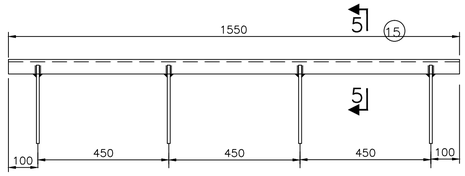

DETAIL OF M-24

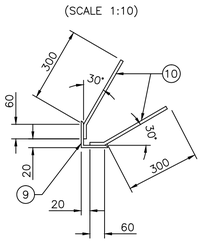

SECTION 5-5
(SCALE 1:10)

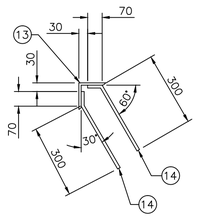

SECTION 9-9
(SCALE 1:10)

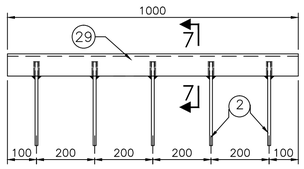

DETAIL OF M-34
(SCALE 1:10)

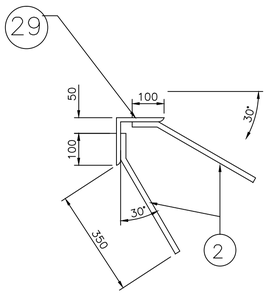

SECTION 7-7

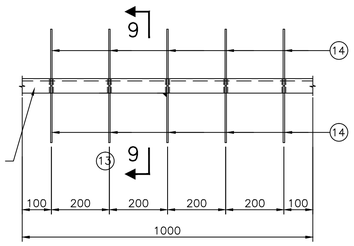

DETAIL OF M-51
(SCALE 1:10)

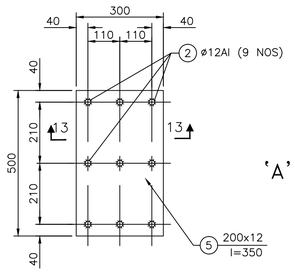

DETAIL OF INSERT M-35
(SCALE 1:10)

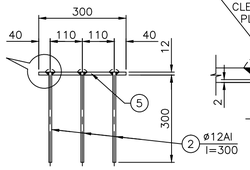

SECTION 13-13

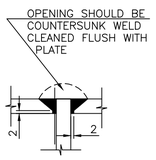

DETAIL 'A"

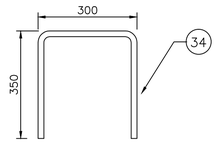

DETAIL OF M-38

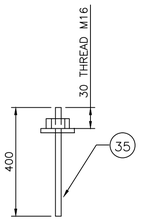

DETAIL OF M-39

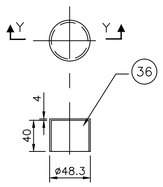

SECTION Y-Y

DETAIL OF M-40

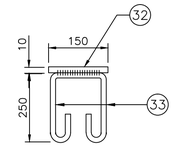

SECTION Z - Z

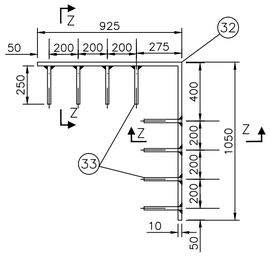

DETAIL OF M-36

NOTE:-

1. FOR INSERTED DETAILS M-1 TO M-20, SEE SHEET 1 OF 1 (K-32) OF THIS DRAWING.
2. FOR SPECIFICATION AND OTHER NOTES REFER DRAWING NO. -CV-113-A-0.

The contents of this document or any part of it shall remain the property of SE "GIPROKOKS", therefore it is strictly forbidden to use it (in whole or partially) without written permission from SE "GIPROKOKS" for copying, processing, reusing, transferring to third partes, for other facilities and purposes

REV. No.	DATE	DESCRIPTION	REV.BY	CHK.BY
01 No	02.2024	INSERT DETAILS CORRECTED	B.Kr	

SUBMITTED FOR | APPROVAL | REFERENCE

ESFAHAN STEEL COMPANY
E.S.Co

EMPLOYER
BHILAI ENGINEERING CORPORATION LIMITED

CONTRACTOR
SE"GIPROKOKS"

DSGN		
DRWN	BK	09.2023
CHECKED	DS	10.2023
APPROVED	DS	10.2023

Coke Oven No.2 Reconstructon.
Coke Oven Battery Foundation
BUTTRESS WALL, INSERTED ARTICLES

DRG. SIZE A1 | SCALE 1:10 | SHEET 2 of 2 | REV. 01
CONTR. DRG. NO.: | REF. Sh.K-33
PROJECT DRG. NO.: D-ES-CM-CO-11-18-CV-119-I-1

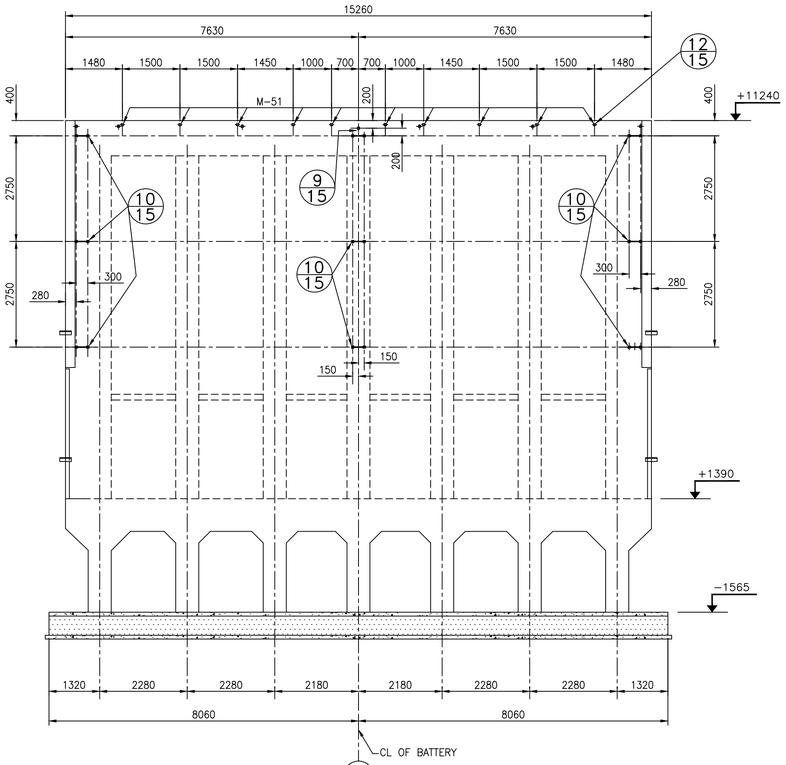

VIEW ALONG
SECTION 13-13

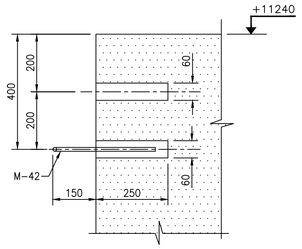

SECTION 01-01

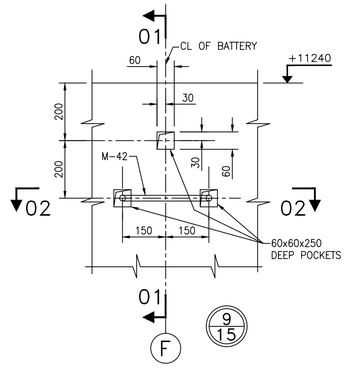

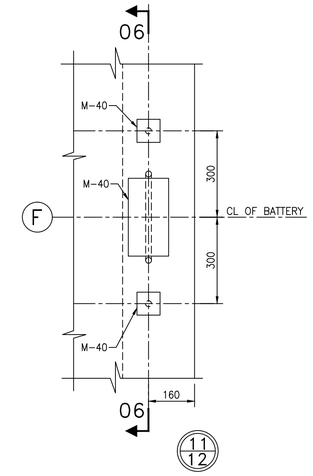

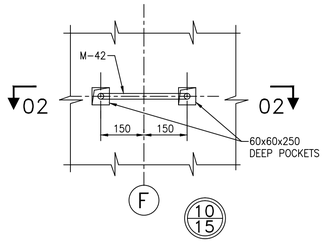

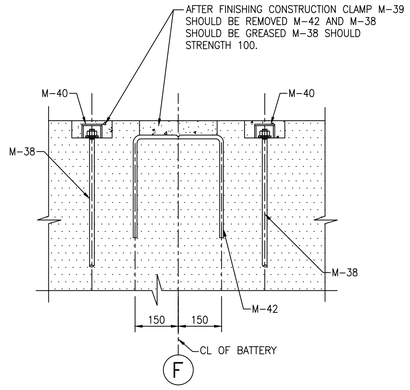

SECTION 06-06

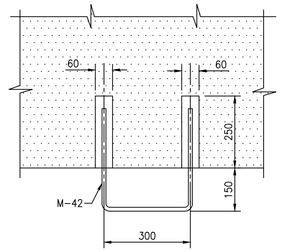

SECTION 02-02
CEMENT MORTAR, STRENGTH SO

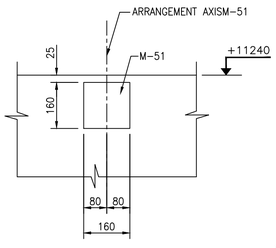

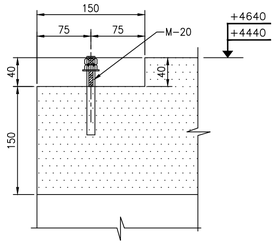

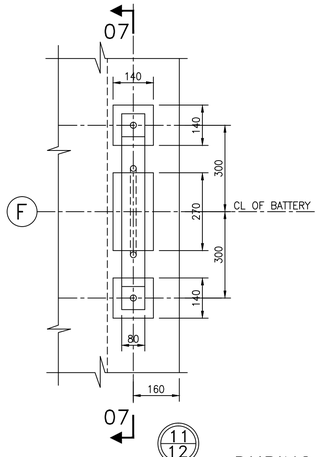

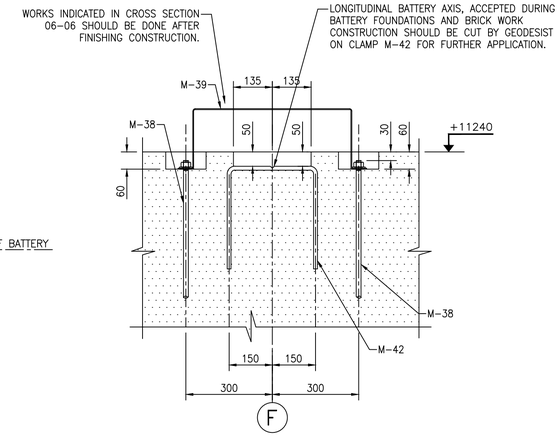

SECTION 07-07

DURING CONSTRUCTION

NOTES-

1. THIS SHEET TO BE CONSIDERED TOGETHER WITH SHEET K-16.

The contents of this document or any part of it shall remain the property of SE "GIPROKOKS", therefore it is strictly forbidden to use it (in whole or partially) without written permission from SE "GIPROKOKS" for copying, processing, reusing, transferring to third parties, for other facilities and purposes

REV. No.	DATE	DESCRIPTION	REV.BY	CHK.BY
01	03.2023	Letter TN0014-CS		

SUBMITTED FOR | APPROVAL | REFERENCE

E.S.Co

EMPLOYER
BHILAI ENGINEERING CORPORATION LIMITED

CONTRACTOR
SE"GIPROKOKS"

DSGN		
DRWN	BK	07.2023
CHECKED	DS	08.2023
APPROVED	DS	08.2023

Coke Oven No.2 Reconstruction.
Coke Oven Battery Foundation
BUTTRESS WALL, SECTIONS
Battery Centre Line

DRG. SIZE A1 | SCALE 1:10 | SHEET 1 of 1 | REV. 00

CONTR. DRG. NO.: | REF. Sh.K-15

PROJECT DRG. NO.: D-ES-CM-CO-11-17-CV-110-I-0

SIZE- A1. PLOT LAYERS : RED=0.5; YELLOW=.35; GREEN=.25; WHITE=.2; CYAN=0.6; OTHERS=.18 FILE NAME : VSP-BEC-1486 R=9.

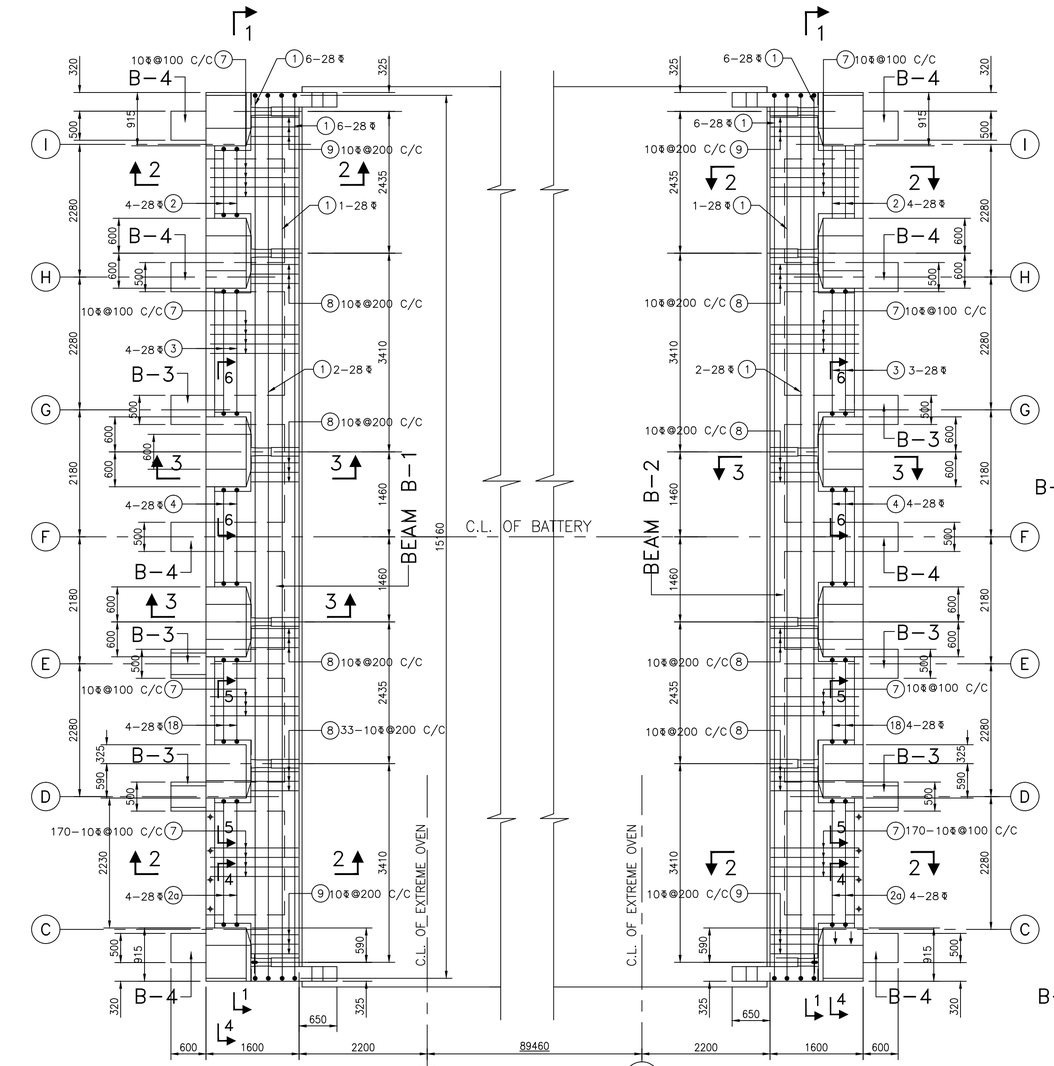

BEAM B-5
(SCALE 1:50)

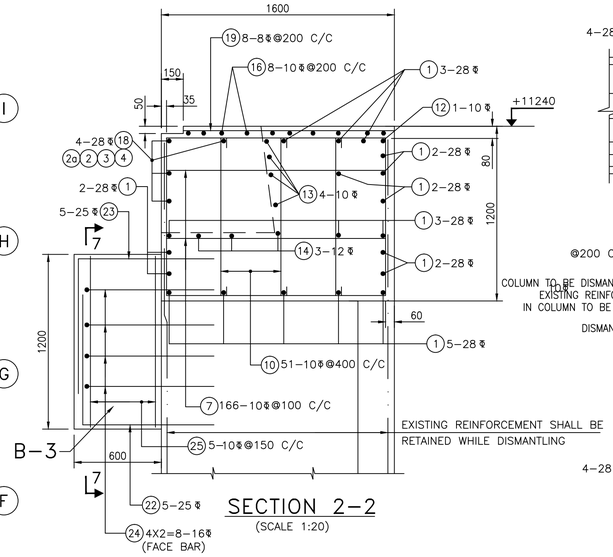

SECTION 2-2
(SCALE 1:20)

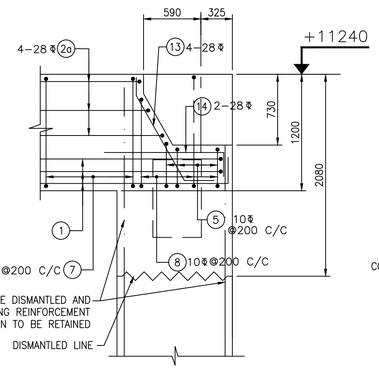

SECTION 4-4
(SCALE 1:30)

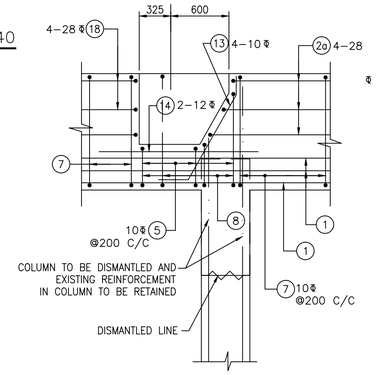

SECTION 5-5
(SCALE 1:30)

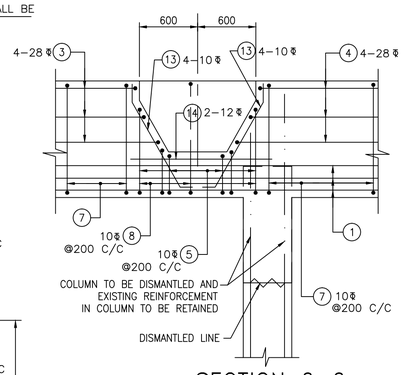

SECTION 6-6
(SCALE 1:30)

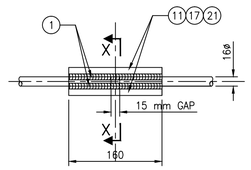

DETAIL "A"
(SCALE 1:5)

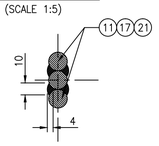

SECTION X-X
(SCALE 1:2.5)

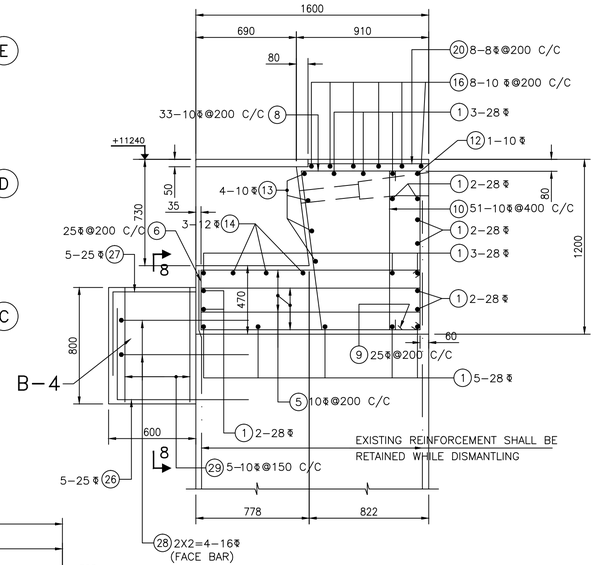

SECTION 3-3
(SCALE 1:20)

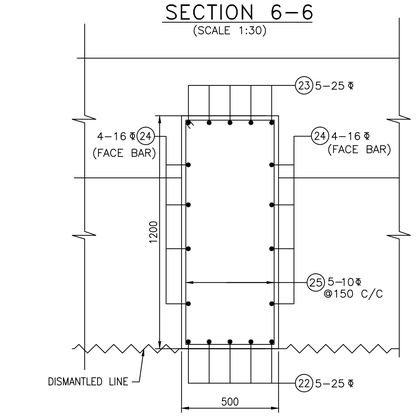

SECTION 7-7
(SCALE 1:15)
(3 NOS)

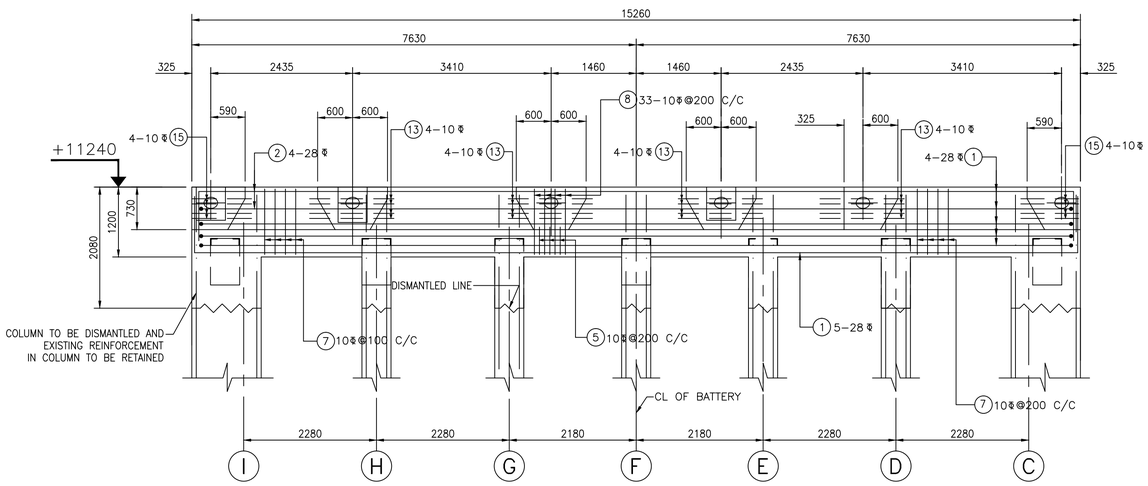

SECTION 1-1
(SCALE 1:50)

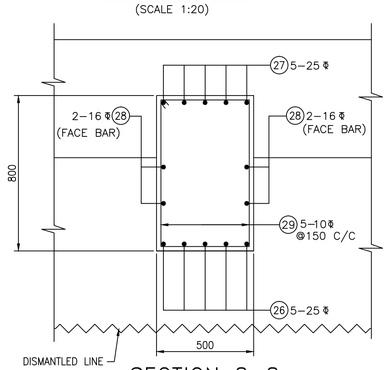

SECTION 8-8
(SCALE 1:15)
(4 NOS)

NOTES-

1. ALL EXISTING VERTICAL REINFORCEMENT SHALL BE EMBBEDED IN NEW STUCTURES UP TO 50xDIA OF BAR. EMBEDED IN NEW STUCTURE UPTO 50xDIA OF BAR.
2. AS IT IS A REBUILDING OF OLD STUCTURE, CHANGES, IF REQUIRED DURING WORK, MAY BE TAKEN AS PER SITE CONDITION.
3. ALL EXISTING VERTICAL BARS IF CUT DURING DISMANTLING SHOULD BE EXTENDED UP TO THE REQUIRED LENGTH WITH SIMILAR BARS. THE LAP WELDING SHALL BE DONE AS PER DETAIL "A".
4. FOR BBS (BAR BENDING SCHEDULE) REFER DRG NO. -17-CV-111 Sh 2 of 2.

The contents of this document or any part of it shall remain the property of SE "GIPROKOKS", therefore it is strictly forbidden to use it (in whole or partially) without written permission from SE "GIPROKOKS" for copying, processing, reusing, transferring to third parties, for other facilities and purposes

REV. No.	DATE	DESCRIPTION	REV.BY	CHK.BY
02	02.2024	REINFOR. BAR CORRECTED	T.M.	
01	09.2023	bbs shfted to new sheet	TM	

SUBMITTED FOR | APPROVAL | ✓ | REFERENCE

E.S.Co

EMPLOYER
BHILAI ENGINEERING CORPORATION LIMITED

CONTRACTOR
SE"GIPROKOKS"

DSGN		
DRWN	BK	07.2023
CHECKED	DS	08.2023
APPROVED	DS	08.2023

Coke Oven No.2 Reconstruction.
Coke Oven Battery Foundation
BUTTRESS WALL, DETAILS OF REINFORCEMENT UPPER PART

DRG. SIZE A1 | SCALE 1:10 | SHEET 1 of 2 | REV. 02

CONTR. DRG. NO.: | REF.

PROJECT DRG. NO.: D-ES-CM-CO-11-17-CV-111-I-2

SPECIFICATION OF REINFORCEMENT FOR EACH ELEMENT							TABLE FOR REINFORCEMENT BARS			
							REQUIRED REINFORCEMENT			
MEMBER	NO.	SHAPE	ø MM	LENGTH MM	NO.	LENGTH L (m)	ø MM	FOR EACH ELEMENT LENGTH L (m)	FOR EACH ELEMENT WEIGHT (kg)	TOTAL WEIGHT (kg)
BEAM B-1 (NO=1)	1	15210 "A"	28ϕ	15770	19	299.63				
	2	1175	28ϕ	1175	4	4.7	8ϕ	104.0	41.08	41.08
	2a	2160	28ϕ	2160	4	8.6	10ϕ	1536.3	952.5	952.5
	3	2140	28ϕ	2140	4	8.6	12ϕ	47.35	42.0	42.0
	4	1650	28ϕ	1650	4	6.6	25ϕ	205.5	772.0	772.0
	5	1750, 300, 540, 1505	10ϕ	4335	64	277.5	28ϕ	349.36	1690.9	1690.9
								TOTAL	3498.5	3498.5
	6	1505, 450, 1505	25ϕ	3460	33	114.2				
	7	1750, 720, 960, 1505	10ϕ	5175	170	879.7				
	8	1050, 1085, 110, 1310, 141, 700	10ϕ	4160	33	137.3				
	9	815, 1085, 110, 700, 130	25ϕ	2615	33	86.3				
	10	1100	10ϕ	1300	51	66.3				
	11	280	28ϕ	280	38	10.6				
	12	15210 "A"	10ϕ	15210	1	15.21				
	13	1500	10ϕ	1500	16	24.0				
	14	15210 "A"	12ϕ	15210	3	46.63				
	15	1100	10ϕ	1100	8	8.8				
	16	15080, 300	10ϕ	15900	8	127.2				
	17	120	12ϕ	120	6	0.72				
	18	1450	28ϕ	1450	4	5.8				
	19	1390	8ϕ	1590	44	70.0				
	20	830	8ϕ	1030	33	34.0				
	21	100	10ϕ	100	2	0.2				

SPECIFICATION OF REINFORCEMENT FOR EACH ELEMENT							TABLE FOR REINFORCEMENT BARS			
							REQUIRED REINFORCEMENT			
MEMBER	NO.	SHAPE	ø MM	LENGTH MM	NO.	LENGTH L (m)	ø MM	FOR EACH ELEMENT LENGTH L (m)	FOR EACH ELEMENT WEIGHT (kg)	TOTAL WEIGHT (kg)
BEAM B-2 (NO=1)	1	15210 "A"	28ϕ	15770	19	299.63				
	2	1175	28ϕ	1175	4	4.7	8ϕ	104.0	41.08	41.08
	2a	2160	28ϕ	2160	4	8.6	10ϕ	1536.3	952.5	952.5
	3	2140	28ϕ	2140	4	8.6	12ϕ	47.35	42.0	42.0
	4	1650	28ϕ	1650	4	6.6	25ϕ	205.5	772.0	772.0
	5	1750, 300, 540, 1505	10ϕ	4335	64	277.5	28ϕ	349.36	1690.9	1690.9
								TOTAL	3498.5	3498.5
	6	1505, 450, 1505	25ϕ	3460	33	114.2				
	7	1750, 720, 960, 1505	10ϕ	5175	170	879.7				
	8	1050, 1085, 110, 1310, 141, 700	10ϕ	4160	33	137.3				
	9	815, 1085, 110, 700, 130	25ϕ	2615	33	86.3				
	10	1100	10ϕ	1300	51	66.3				
	11	280	28ϕ	280	38	10.6				
	12	15210 "A"	10ϕ	15210	1	15.21				
	13	1500	10ϕ	1500	16	24.0				
	14	15210 "A"	12ϕ	15210	3	46.63				
	15	1100	10ϕ	1100	8	8.8				
	16	15080, 300	10ϕ	15900	8	127.2				
	17	120	12ϕ	120	6	0.72				
	18	1450	28ϕ	1450	4	5.8				
	19	1390	8ϕ	1590	44	70.0				
	20	830	8ϕ	1030	33	34.0				
	21	100	10ϕ	100	2	0.2				

SPECIFICATION OF REINFORCEMENT FOR EACH ELEMENT							TABLE FOR REINFORCEMENT BARS		
							REQUIRED REINFORCEMENT		
MEMBER	NO.	SHAPE	ø MM	LENGTH MM	NO.	LENGTH L (m)	ø MM	ELEMENT LENGTH L (m)	TOTAL WEIGHT (kg)
BEAM B-3 (NOS=6)	22	550, 1600	25ϕ	2150	5x6	64.50	10ϕ	208.8	129.5
	23	1600, 550	25ϕ	2150	5x6	64.50	16ϕ	184.8	292.0
	24	1400, 250	16ϕ	1650	8x6	79.20	25ϕ	285.0	1097.25
	25	1150, 450	10ϕ	3440	5x6	103.20		TOTAL	1518.75
BEAM B-4 (NOS=8)	26	350, 1600	25ϕ	1950	5x8	78.00			
	27	1600, 350	25ϕ	1950	5x8	78.00			
	28	1400, 250	16ϕ	1650	8x8	105.60			
	29	750, 450	10ϕ	2640	5x8	105.60			

VOLUME OF CONCRETE AND WEIGHT OF STEEL FOR ELEMENT							
TYPE OF STRUCTURE	CONCRETE CLASS (M^3)			LEAN CONCRETE M^3	STEEL BARS (TON)		
	–	–	M30 HEATRESTSTANT		ϕ		
BEAM B-1 TO B-4	–	–	77.0	–	8.3545		

NOTES–

1. THIS SHEET TO BE CONSIDERED TOGETHER WITH DRG. NO. –17–CV–111 , Sh 1 of 2.

The contents of this document or any part of it shall remain the property of SE "GIPROKOKS", therefore it is strictly forbidden to use it (in whole or partially) without written permission from SE "GIPROKOKS" for copying, processing, reusing, transferring to third parties, for other facilities and purposes

REV. No.	DATE	DESCRIPTION	REV.BY	CHK.BY
02	02.2024	REINFOR. BAR CORRECTED	T.M.	
01	09.2023	bbs shfted to new sheet	TM	

SUBMITTED FOR APPROVAL ✓ REFERENCE

E.S.Co

EMPLOYER
BHILAI ENGINEERING CORPORATION LIMITED

CONTRACTOR
SE"GIPROKOKS"

DSGN		
DRWN	BK	07.2023
CHECKED	DS	08.2023
APPROVED	DS	08.2023

Coke Oven No.2 Reconstructon.
Coke Oven Battery Foundation
BUTTRESS WALL, SPECIFICATION OF REINFORCEMENT

DRG. SIZE A2 | SCALE 1:10 | SHEET 2 of 2 | REV. 02

CONTR. DRG. NO.: | REF.

PROJECT DRG. NO.: D-ES-CM-CO-11-17-CV-111-I-2

DESIGN CRITERION

1. Initial Statements

1.1 The documentation was elaborated in accordance with the technical assignment for the development of basic and detailed engineering for the reconstruction of Coke Oven Batt. No.2 and materials of inspection of battery foundations civil structures "Evaluation of Battery Concrete Structure Condition for Serviceability." Esfahan Steel Company, January 2023.

1.2 Absolute deviation equal to 1757.500 is assumed as conventional elevetaion0.000

2. Initial Design Data

2.1 The base wind speed according to standard P5–E–CE–500 for Esfahan is 110 km/h and minimum design load is 0.77 kN/m2. Steel Company, January 2023.

2.2 According to report "SURVEY & RESULT OF GEOTECHNICAL INVESTIGATION AT THE RECONST. OF BATTERY 2", performed by Amouneh Foulad Consulting Eng. Co.in Feb. 2022:

- the study area is a relatively medium risk zone and the basis of design seismic acceleration is 0.25g;
- the maximum bearing capacity of soil is equal to 2.5 kg/cm2

3. Constructive Concept

3.1 Structure of buttresses should be made of monolithic heat–resistant concrete.

3.2 Prior to new construction of buttresses, dismantling of existing buttresses should be done as per project drawing no. B–ES–CM–CO–10–13–CV–006–A–0 (Contr. drg no. 1345313–AC) 2 Sheets.

3.3 Concreting of the structure shall be made with use of vibrators and with close control excluding the possibility of concrete disintegration, formation of cavities and other defects.

3.4 Inserted articles and anchor bolts shall be installed before the concreting according to the instructions on the shuttering drawing. Foulad Consulting Eng. Co.in Feb. 2022:

..Contd.

SUBMITTED FOR	APPROVAL	✓	REFERENCE	

E.S.C.o. Esfahan Steel Company	DSGN	DSGN	DSG.DATE	Coke Oven N0.2 Reconstruction	
	DRWN	BK	02–09–23	DESIGN CRITERIA	
EMPLOYER BHILAI ENGINEERING CORPORATION LIMITED	CHECKED	DS	07–09–23	BUTTRESS WALL	
	APPROVED		APPD.DATE	RECONSTRUCTION	
	DRG. SIZE	A4	SCALE: – NTS	SHEET– 1 of 3	REV. – 0
CONTRACTOR SE"GIPROKOKS"	CONTR. DRG. NO.:				
	PROJECT DRG. NO.– D–ES–CM–CO–11–18–CV–113–I–0				

REV. No	DATE	DESCRIPTION	REV.BY	CHK.BY

DESIGN CRITERION

3. Constructive Concept, Contd.

3.5 The quality of welded joint should be controlled. Joints shall be arranged alternately. Joints should be arranged in staggered pattern. In one section volume of joint should not exceed 50%.

3.6 Portion of buttresses not under dismantling shall be repaired as Note no. 2 of drawing no. B-ES-CM-CO-10.13.CV.006 (Sh 1)

3.7 All construction and erection work shall be done in accordance with the plant safety regulations.

3.8 For instruction on the instruction on the fabrication of Inserted articles Refer Drg. No. D-ES-CM-CO-11-18-CV-119-I-0.

4. Corrosion Protection

4.1 Steel structures are subject to anti-corrosion protection in accordance with general standards for painting and taking into account the aggression in condition of Coke Oven production.

4.2 The composition of the protective coating is adopted in accordance with the design criteria and as agreed with the client.

..Contd. Sheet 3 of 3

SUBMITTED FOR	APPROVAL	✓	REFERENCE	

E.S.C.o. Esfahan Steel Company	DSGN	DSGN	DSG.DATE	Coke Oven NO.2 Reconstruction	
	DRWN	BK	02-09-23	DESIGN CRITERIA	
EMPLOYER BHILAI ENGINEERING CORPORATION LIMITED	CHECKED	DS	07-09-23	BUTTRESS WALL	
	APPROVED		APPD.DATE	RECONSTRUCTION	
	DRG. SIZE	A4	SCALE: - NTS	SHEET- 2 of 3	REV. - 0
CONTRACTOR SE"GIPROKOKS"	CONTR. DRG. NO.:				
	PROJECT DRG. NO.- D-ES-CM-CO-11-18-CV-113-I-0				

REV. No	DATE	DESCRIPTION	REV.BY	CHK.BY

DESIGN CRITERION

INSTRUCTIONS FOR EMBEDDED ARTICLES MANUFACTURING

Bolts shall be manufoctured with metric thread with nuts and washers. Threaded part of the bolt shall be protected from damages. The quality of welded connections of embeded articles Conforms to all normative requirements and shall be warranted by the Customer. The width of welded joints. except otherwise stated is the following

a) at welding plates to each other – on the less thickness of welded elements

b) at welding body of round section to plate – half of the diameter of welded body. but not less than 8mm (see unit "B" on the present drawing)

- Outer surface of embedded articles shall be marked with indelible paint.
- Instruction for embedded articles painting shall be as DIN 55928(Part 4).
- Embedded articles shall be coated with primer loyer for protection against corrosion while storing.
- Covered electrodes for electric arc welding should conform to Iranian standard.

Materials

- rolled metal 5 to 20 mm thick – As per EN10029
- Rolled metal up to 20 mm thick – steel grade E–250A as per Indion standard IS:2062 (assortment IS:1730–1989)
- Equal, unequal angle bars, I–beams, channels as per European standard EN 17100.
- Steel pipes – Material as EN 10029
- Foundation bolts should conform to ESCo plant standard
- Nuts should conform to Iranian standard.
- Washers should conform to Iranian standard.
- Reinforcing rods:
- Ф– Periodical profile reinforcement bars grade Fe415 as per DIN 1045

SUBMITTED FOR	APPROVAL	✓	REFERENCE	

E.S.C.o. Esfahan Steel Company	DSGN	DSGN	DSG.DATE	Coke Oven N0.2 Reconstruction	
	DRWN	BK	02–09–23	DESIGN CRITERIA	
EMPLOYER BHILAI ENGINEERING CORPORATION LIMITED	CHECKED	DS	07–09–23	BUTTRESS WALL	
	APPROVED		APPD.DATE	RECONSTRUCTION	
	DRG. SIZE	A4	SCALE: – NTS	SHEET– 3 of 3	REV. – 0
CONTRACTOR SE"GIPROKOKS"	CONTR. DRG. NO.:				
	PROJECT DRG. NO.– D–ES–CM–CO–11–18–CV–113–I–0				

REV. No	DATE	DESCRIPTION	REV.BY	CHK.BY

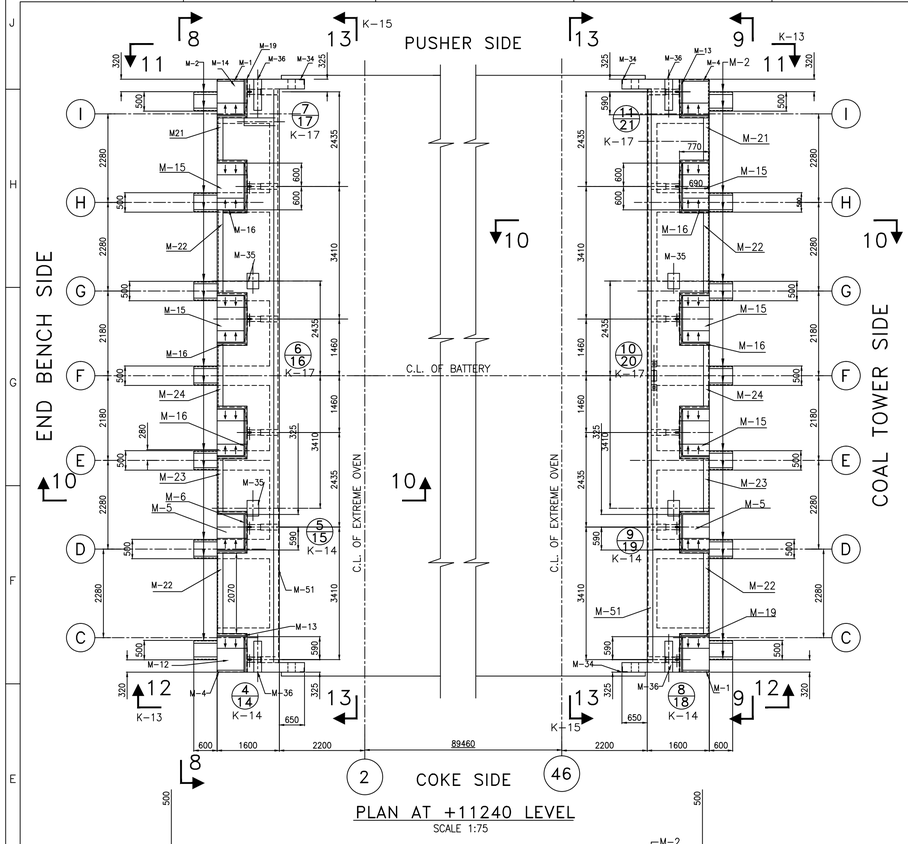

PLAN AT +11240 LEVEL
SCALE 1:75

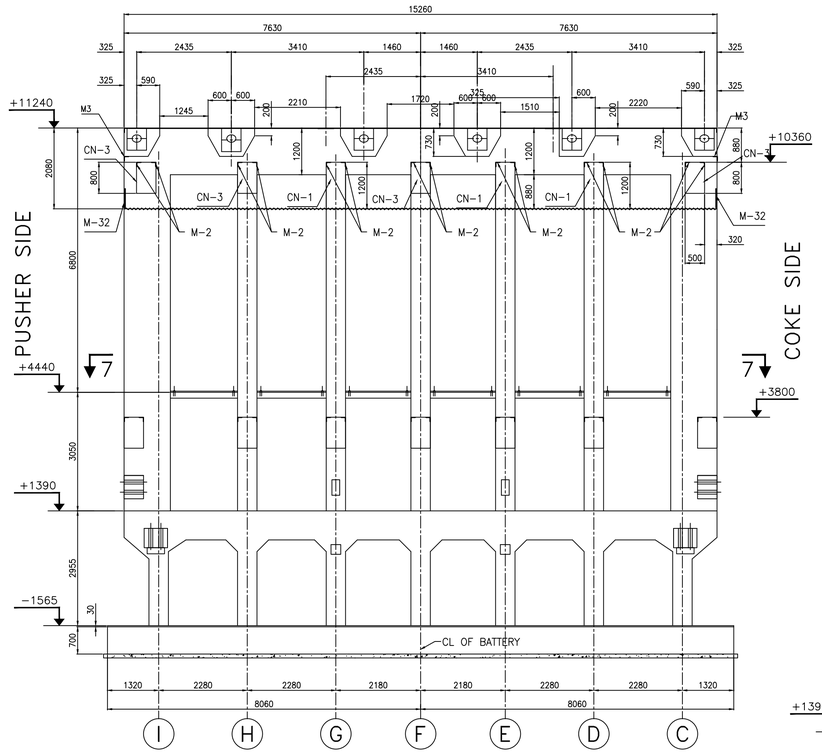

VIEW ALONG SECTION 8-8
SCALE 1:75

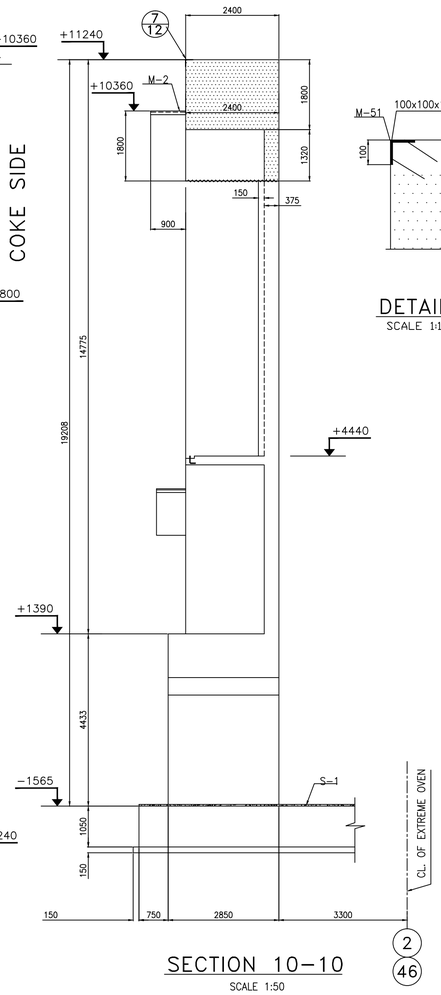

SECTION 10-10
SCALE 1:50

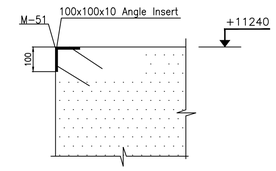

DETAIL 7/12
SCALE 1:10

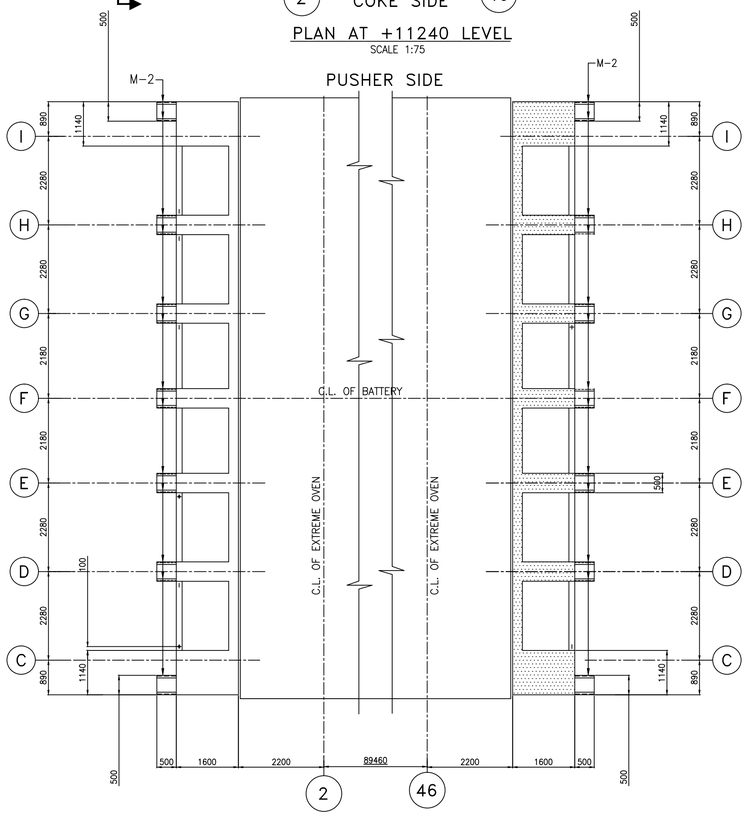

PLAN AT VIEW 7-7
SCALE 1:75

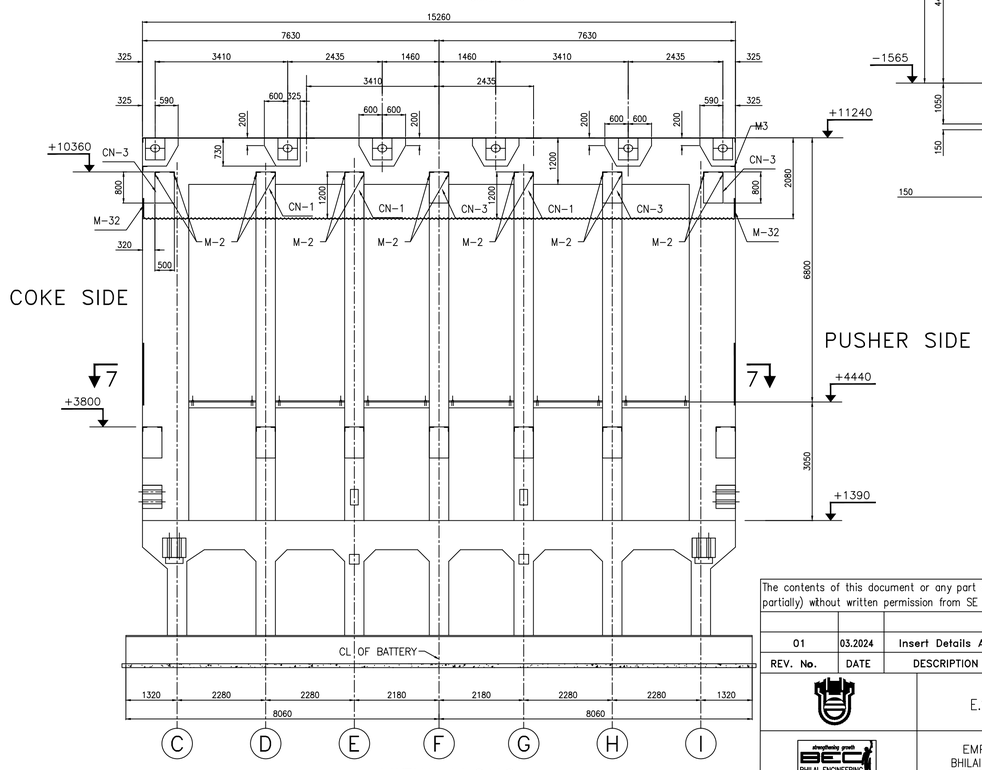

VIEW ALONG SECTION 9-9
SCALE 1:75

The contents of this document or any part of it shall remain the property of SE "GIPROKOKS", therefore it is strictly forbidden to use it (in whole or partially) without written permission from SE "GIPROKOKS" for copying, processing, reusing, transferring to third parties, for other facilities and purposes

REV. No.	DATE	DESCRIPTION	REV.BY	CHK.BY
01	03.2024	Insert Details Added	B.Kr	

SUBMITTED FOR | APPROVAL | ✓ | REFERENCE

E.S.Co

EMPLOYER
BHILAI ENGINEERING CORPORATION LIMITED

CONTRACTOR
SE"GIPROKOKS"

DSGN		
DRWN	BK	07.2023
CHECKED	DS	08.2023
APPROVED	DS	08.2023

Coke Oven No.2 Reconstructon.
Coke Oven Battery Foundation
BUTTRESS WALL, PLANS AND VIEWS

DRG. SIZE	A1	SCALE	1:10	SHEET	1 of 1	REV.	01

CONTR. DRG. NO.: REF. Sh.K-16

PROJECT DRG. NO.: D-ES-CM-CO-11-18-CV-114-I-1

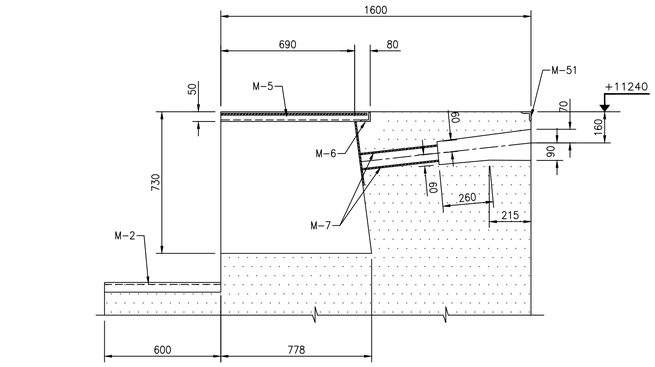

SECTION 5–5
(SCALE 1:15)

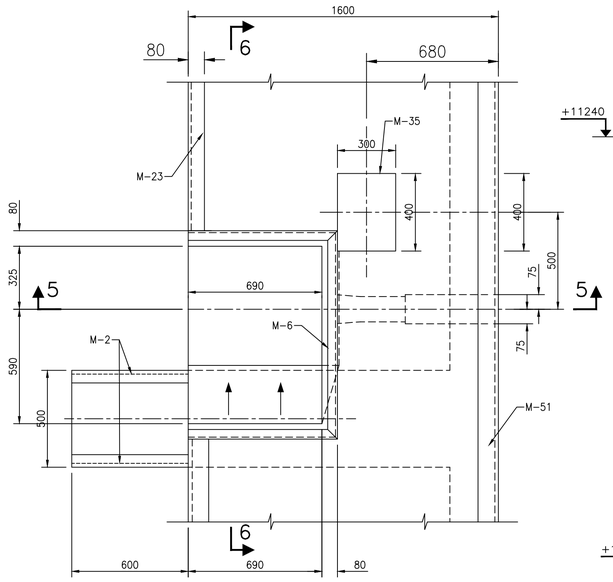

DETAIL 5/15
SCALE 1:15

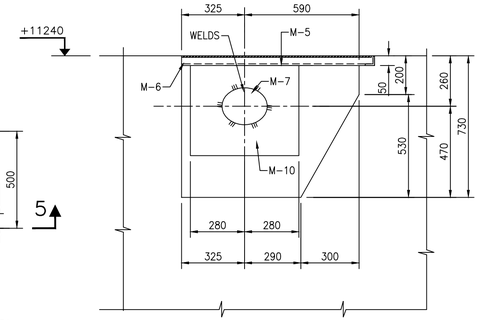

SECTION 6–6
(SCALE 1:15)

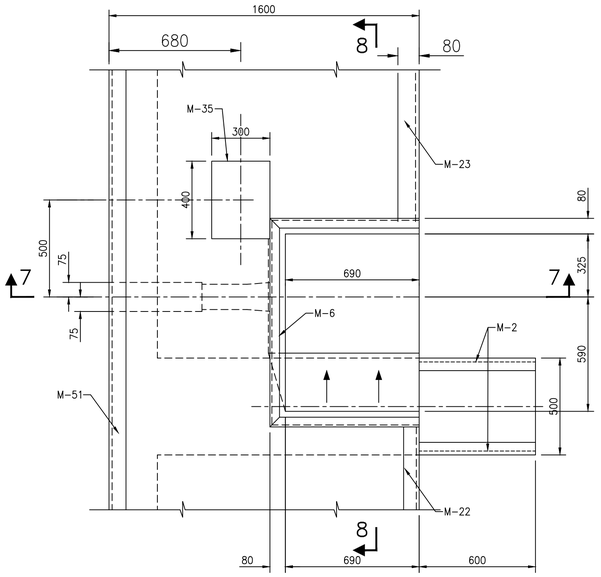

DETAIL 9/19
SCALE 1:15

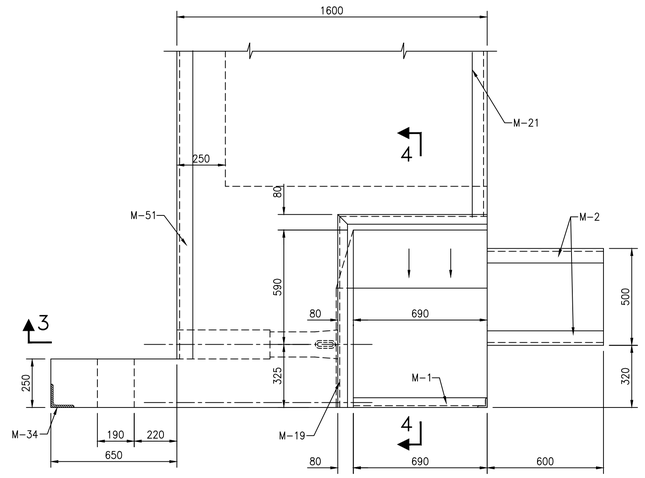

DETAIL 8/18
SCALE 1:15

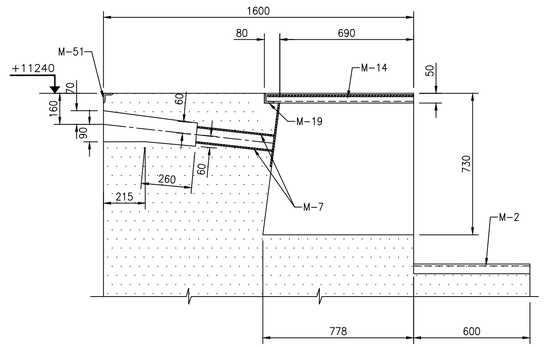

SECTION 3–3
(SCALE 1:15)

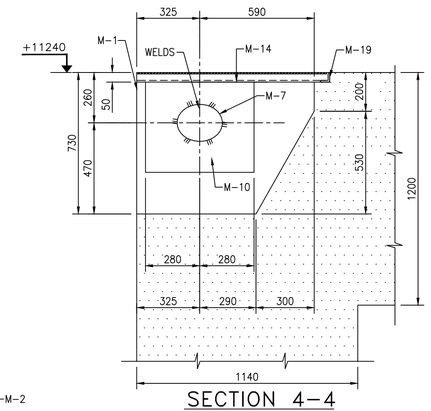

SECTION 4–4
(SCALE 1:15)

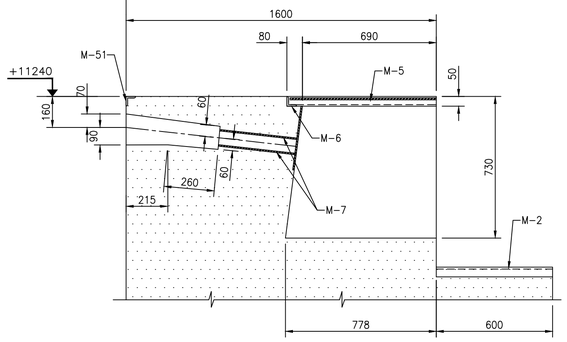

SECTION 7–7
(SCALE 1:15)

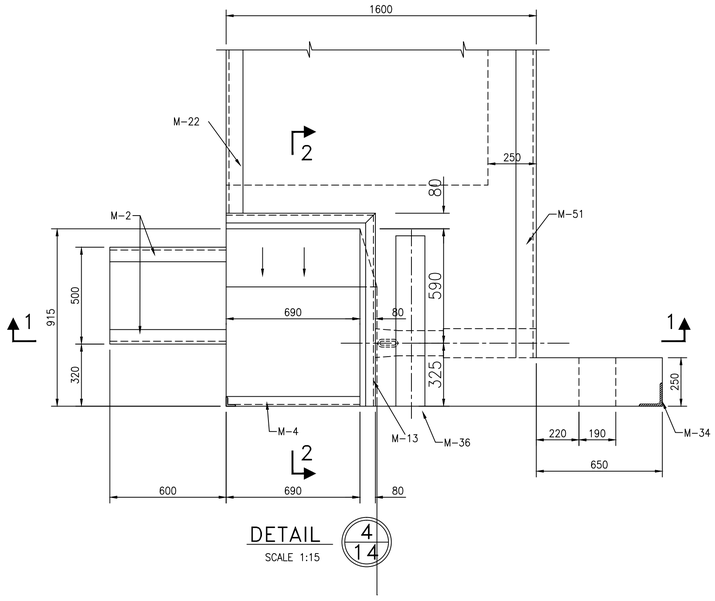

DETAIL 4/14
SCALE 1:15

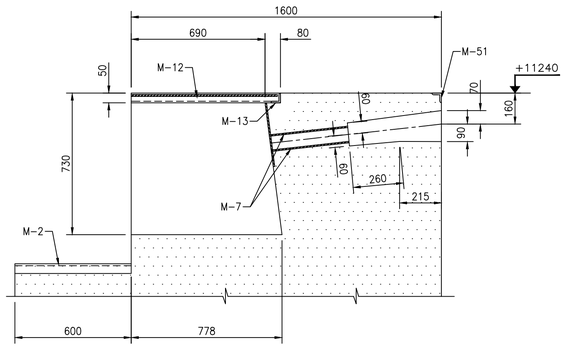

SECTION 1–1
(SCALE 1:15)

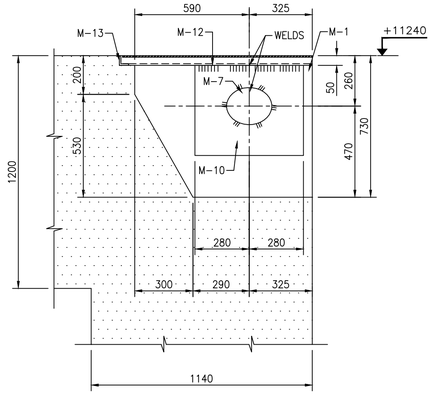

SECTION 2–2
(SCALE 1:15)

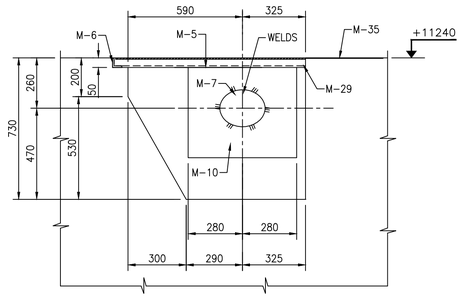

SECTION 8–8
(SCALE 1:15)

NOTES–

1. THIS SHEET TO BE CONSIDERED TOGETHER WITH SHEET K–16.

The contents of this document or any part of it shall remain the property of SE "GIPROKOKS", therefore it is strictly forbidden to use it (in whole or partially) without written permission from SE "GIPROKOKS" for copying, processing, reusing, transferring to third parties, for other facilities and purposes

REV. No.	DATE	DESCRIPTION	REV.BY	CHK.BY
01	02.2024	Inserts Details corrected	BK	

SUBMITTED FOR | APPROVAL | REFERENCE

E.S.Co

EMPLOYER
BHILAI ENGINEERING CORPORATION LIMITED

CONTRACTOR
SE"GIPROKOKS"

DSGN		
DRWN	BK	07.2023
CHECKED	DS	08.2023
APPROVED	DS	08.2023

Coke Oven No.2 Reconstructon.
Coke Oven Battery Foundation
BUTTRESS WALL,SECTIONS
Upper Portion

DRG. SIZE A1 | SCALE 1:10 | SHEET 1 of 1 | REV. 01
CONTR. DRG. NO.: | REF. Sh.K–14
PROJECT DRG. NO.: D–ES–CM–CO–11–18–CV–115–I–1

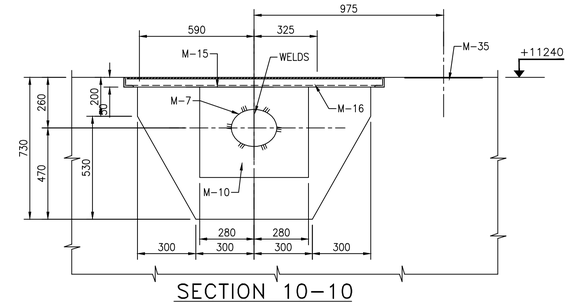

SECTION 10–10
(SCALE 1:15)

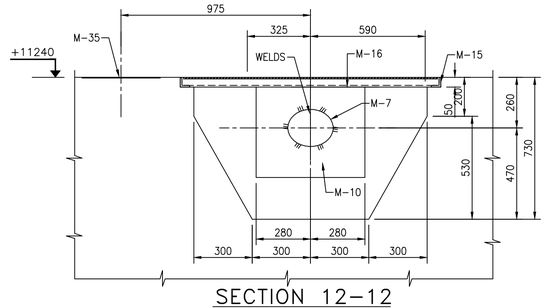

SECTION 12–12
(SCALE 1:15)

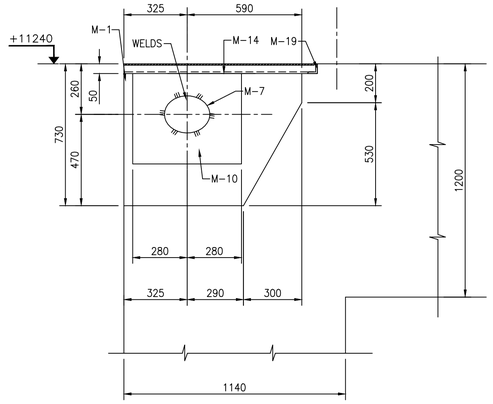

SECTION 14–14
(SCALE 1:15)

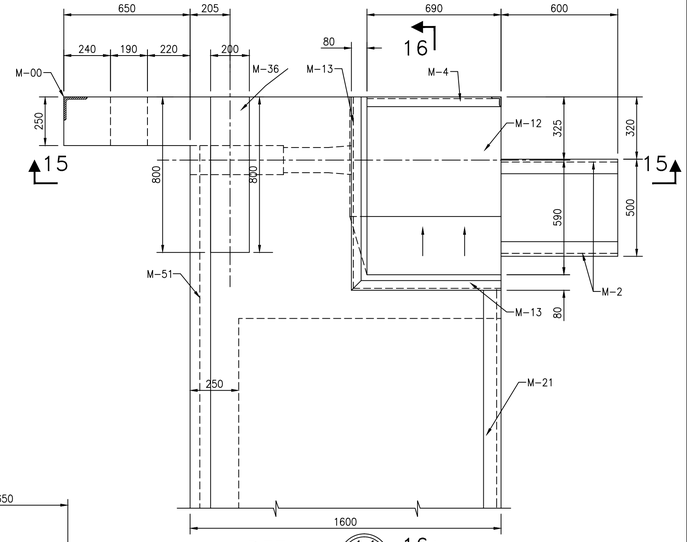

DETAIL 11/21
SCALE 1:15

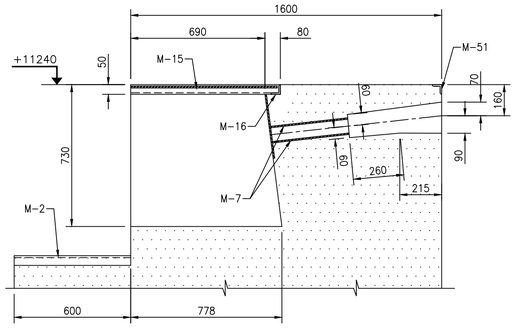

SECTION 9–9
(SCALE 1:15)

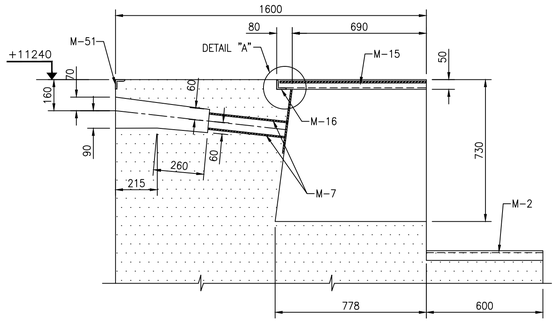

SECTION 11–11
(SCALE 1:15)

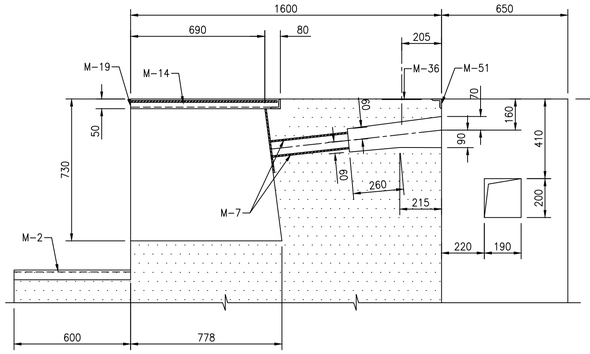

SECTION 13–13
(SCALE 1:15)

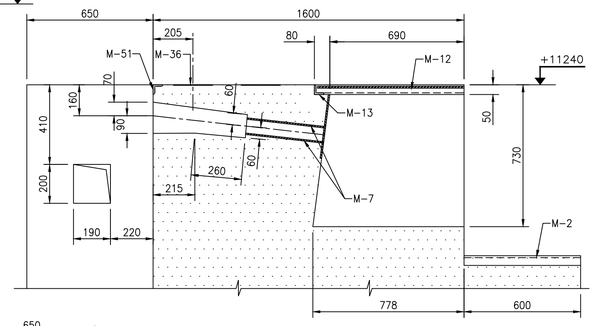

SECTION 15–15
(SCALE 1:15)

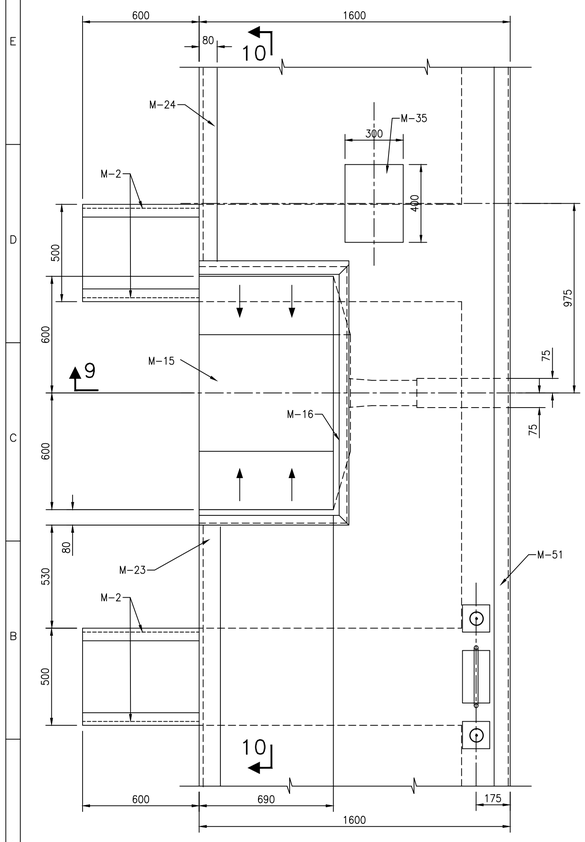

DETAIL 6/16
SCALE 1:15

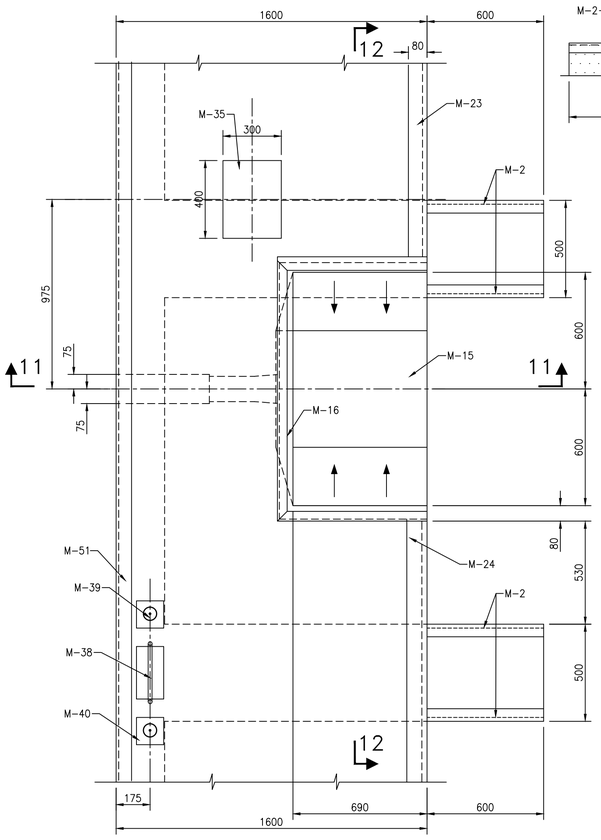

DETAIL 10/20
SCALE 1:15

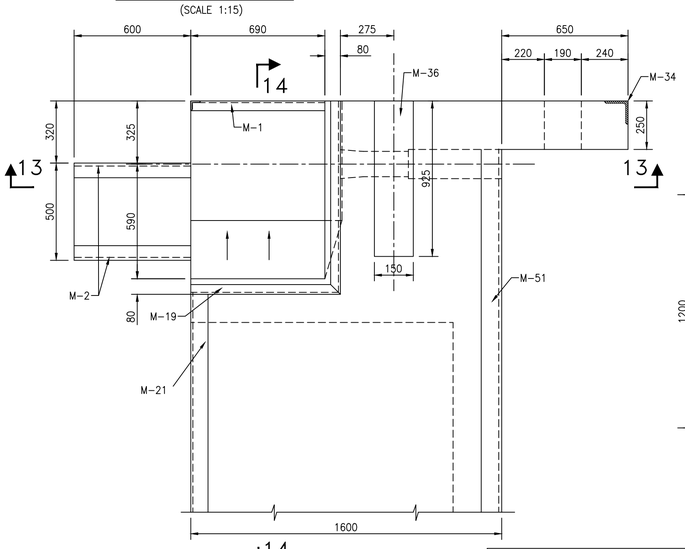

DETAIL 7/17
SCALE 1:15

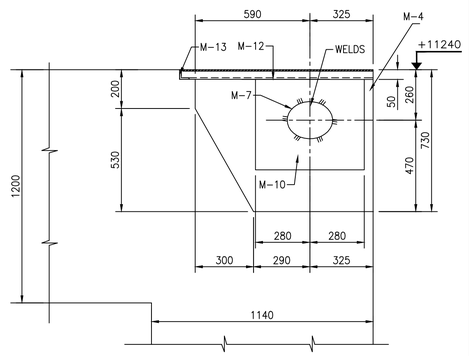

SECTION 16–16
(SCALE 1:15)

NOTES–

1. 'THIS SHEET TO BE CONSIDERED TOGETHER WITH SHEET CV–114–I–0.

The contents of this document or any part of it shall remain the property of SE "GIPROKOKS", therefore it is strictly forbidden to use it (in whole or partially) without written permission from SE "GIPROKOKS" for copying, processing, reusing, transferring to third parties, for other facilties and purposes

REV. No.	DATE	DESCRIPTION	REV.BY	CHK.BY
01	02.2024	Insert Details Corrected	B.Kr	

SUBMITTED FOR APPROVAL ✓ REFERENCE

E.S.Co

EMPLOYER
BHILAI ENGINEERING CORPORATION LIMITED

CONTRACTOR
SE"GIPROKOKS"

DSGN		
DRWN	BK	07.2023
CHECKED	DS	08.2023
APPROVED	DS	08.2023

Coke Oven No.2 Reconstructon.
Coke Oven Battery Foundation
BUTTRESS WALL, ASSEMBLIES AT TIE ROD POCKETS

DRG. SIZE A1 | SCALE 1:10 | SHEET 1 of 1 | REV. 01

CONTR. DRG. NO.: | REF. Sh.K–17

PROJECT DRG. NO.: D–ES–CM–CO–11–18–CV–116–I–1

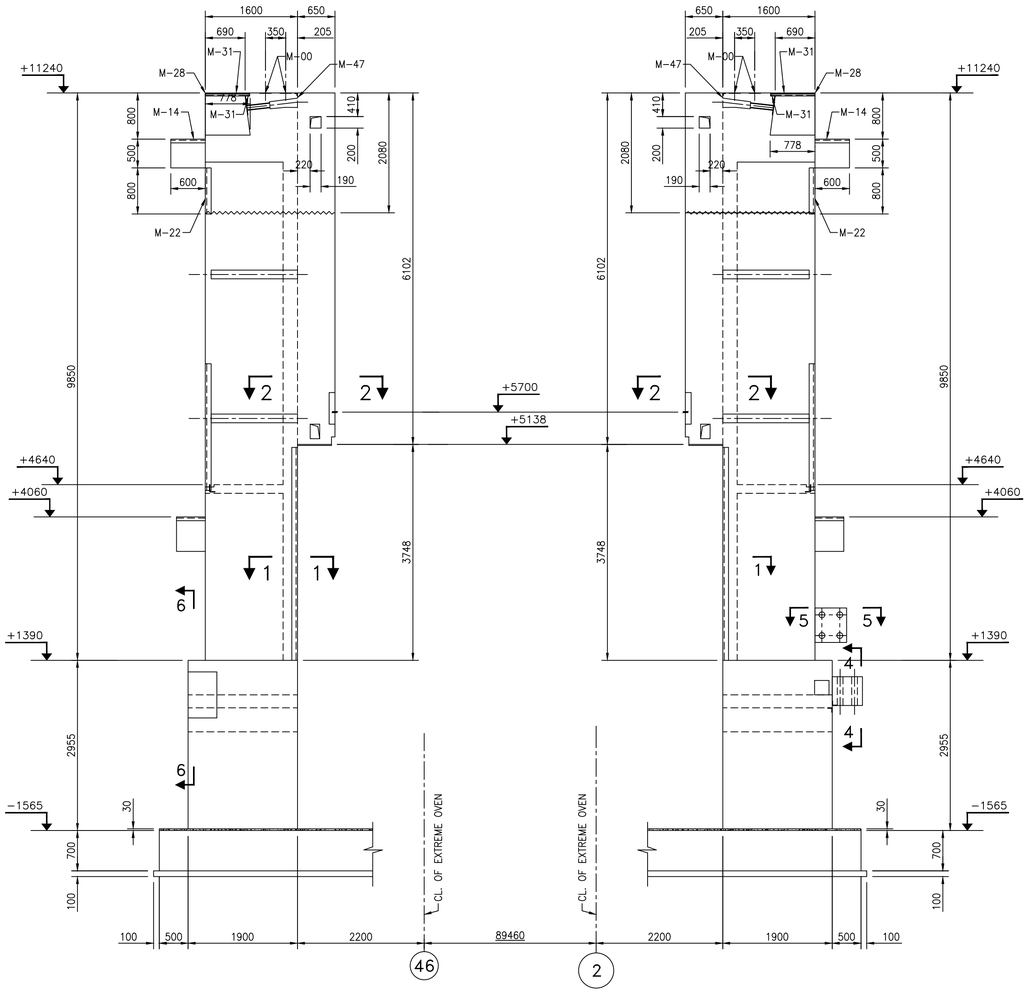

VIEW ALONG
SECTION 11–11
SCALE 1:75

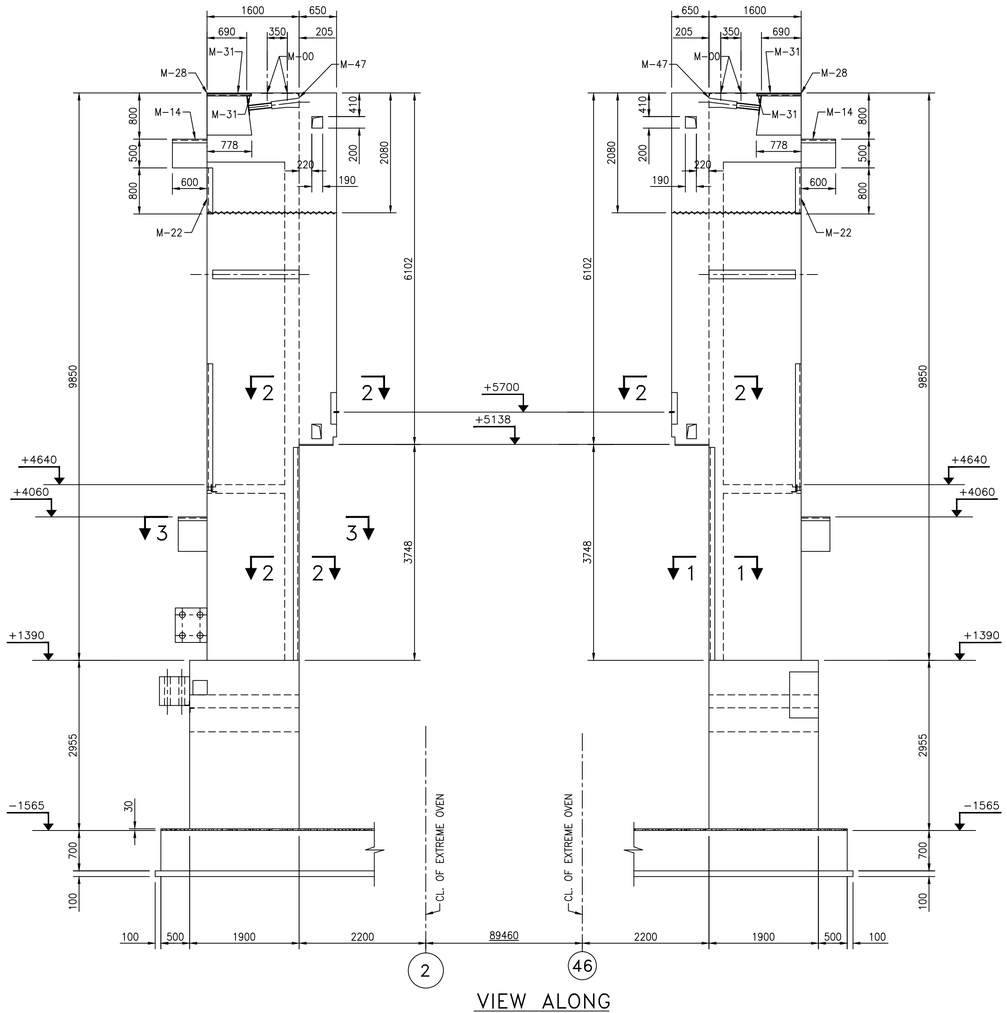

VIEW ALONG
SECTION 12–12
SCALE 1:75

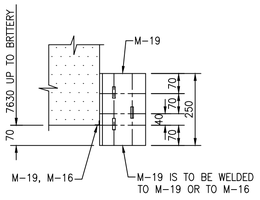

SECTION 2–2
SCALE 1:10

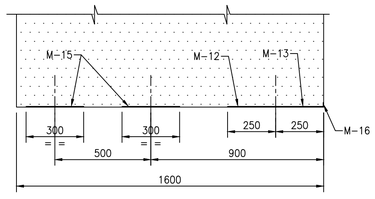

SECTION 3–3
SCALE 1:15

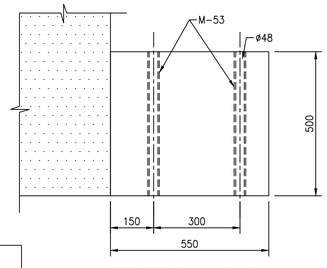

SECTION 5–5
SCALE 1:10

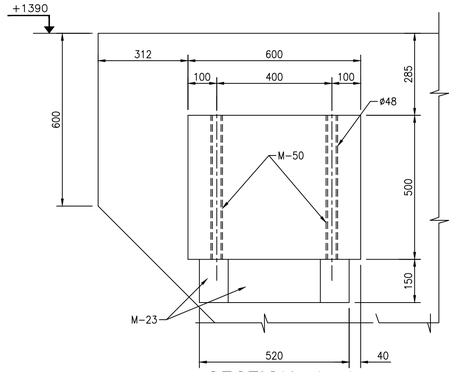

SECTION 4–4
SCALE 1:10

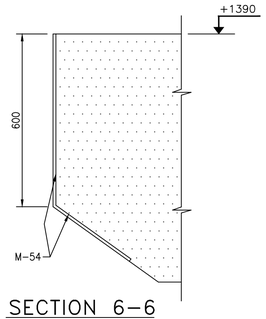

SECTION 6–6
SCALE 1:10

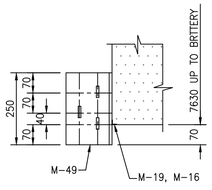

SECTION 1–1
SCALE 1:10

NOTES–

1. THIS SHEET TO BE CONSIDERED TOGETHER WITH SHEET K–16.
2. M–15 TO BE INSTALLED SO THAT INCLINED ANCHORS SHOULD BE AT THE TOP.

The contents of this document or any part of it shall remain the property of SE "GIPROKOKS", therefore it is strictly forbidden to use it (in whole or partially) without written permission from SE "GIPROKOKS" for copying, processing, reusing, transferring to thrid partes, for other facilities and purposes

REV. No.	DATE	DESCRIPTION	REV.BY	CHK.BY
01	03.2023	Letter TN0014–CS		

SUBMITTED FOR | APPROVAL | REFERENCE

E.S.Co

EMPLOYER
BHILAI ENGINEERING CORPORATION LIMITED

ГИПРОКОКС GIPROKOKS
CONTRACTOR
SE"GIPROKOKS"

DSGN		
DRWN	BK	07.2023
CHECKED	DS	08.2023
APPROVED	DS	08.2023

Coke Oven No.2 Reconstructon.
Coke Oven Battery Foundation
BUTTRESS WALL, VIEWS
Elevation

DRG. SIZE	A1	SCALE	1:10	SHEET	1 of 1	REV.	00

CONTR. DRG. NO.: REF. Sh.K–14
PROJECT DRG. №.: D–ES–CM–CO–11–17–CV–117–I–0

No.-772530 (SHEET NO. K-32)

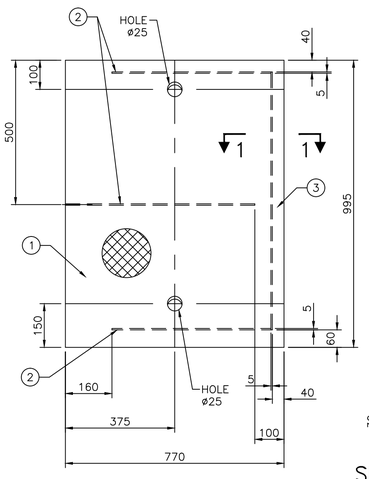

DETAIL OF M-12
(SCALE 1:10)

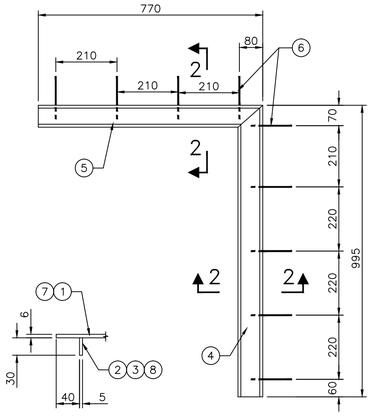

SECTION 1-1
(SCALE 1:5)

DETAIL OF M-13
(SCALE 1:10)

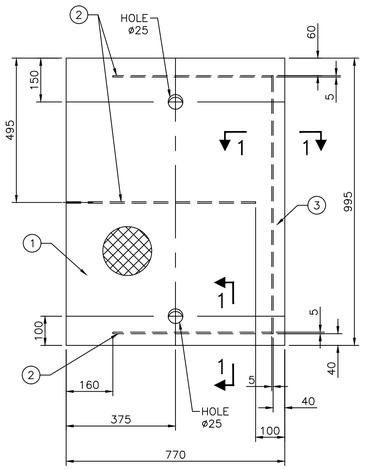

DETAIL OF M-14
(SCALE 1:10)

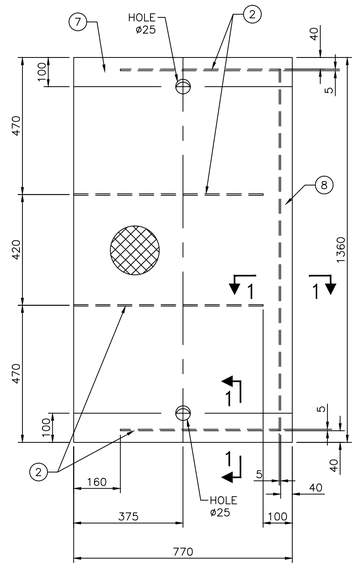

DETAIL OF M-15
(SCALE 1:10)

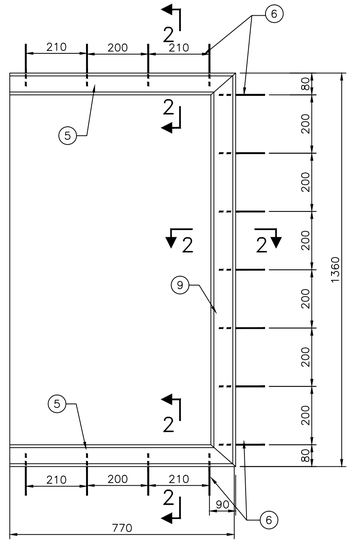

DETAIL OF M-16
(SCALE 1:10)

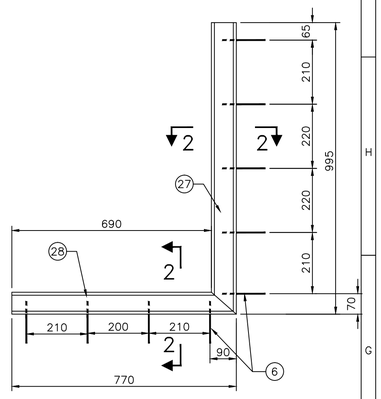

DETAIL OF M-19
(SCALE 1:10)

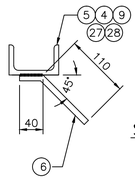

SECTION 2-2
(SCALE 1:5)

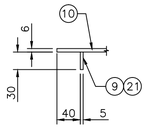

SECTION 4-4
(SCALE 1:5)

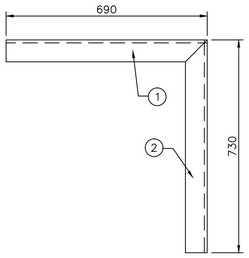

DETAIL OF M-1
(SCALE 1:10)

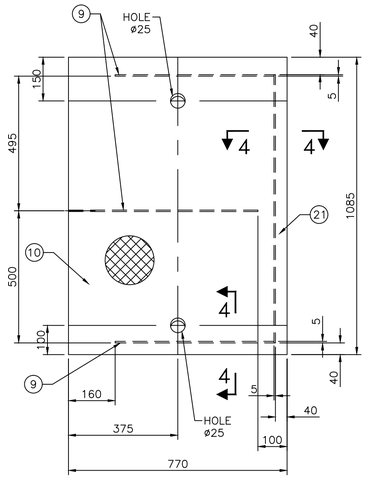

DETAIL OF M-5
(SCALE 1:10)

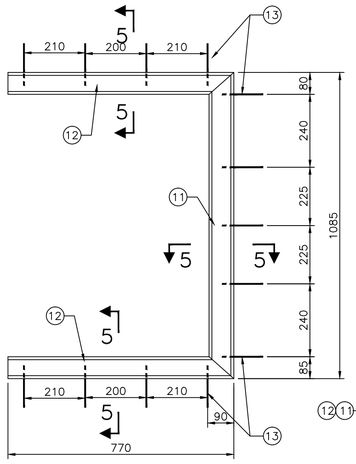

DETAIL OF M-6
(SCALE 1:10)

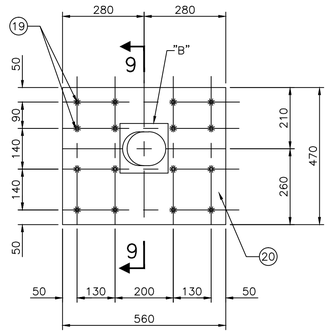

DETAIL OF M-10
(SCALE 1:10)

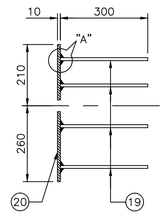

SECTION 9-9
(SCALE 1:10)

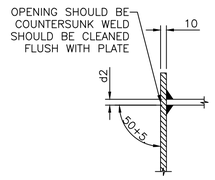

DETAIL "A"
(SCALE 1:5)

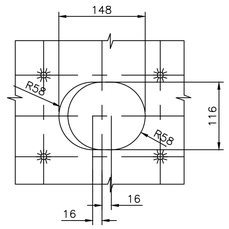

DETAIL "B"
(SCALE 1:5)

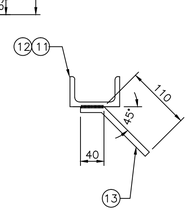

SECTION 5-5
(SCALE 1:5)

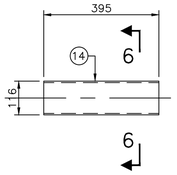

DETAIL OF M-7
(SCALE 1:10)

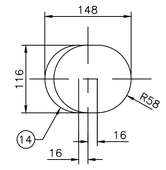

SECTION 6-6
(SCALE 1:5)

NOTE:-

1. FOR INSERTED ARTICLES M-20 TO M-51 REFER TO SHEET 2 OF THIS DRAWING(K-33).
2. INSTRUCTIONS ON MANUFACTURING THE INSERTED ARTICLES SEE -18-CV-113.

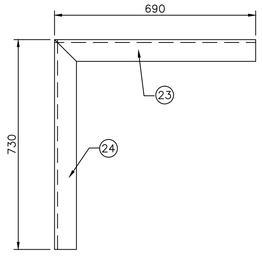

DETAIL OF M-4
(SCALE 1:10)

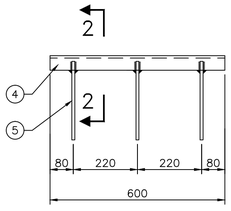

DETAIL OF M-2
(SCALE 1:10)

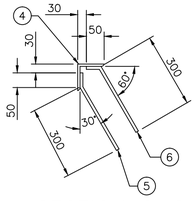

SECTION 2-2
(SCALE 1:10)

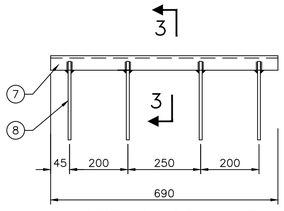

DETAIL OF M-3
(SCALE 1:10)

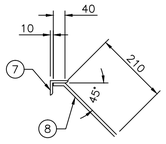

SECTION 3-3
(SCALE 1:10)

The contents of this document or any part of it shall remain the property of SE "GIPROKOKS", therefore it is strictly forbidden to use it (in whole or partially) without written permission from SE "GIPROKOKS" for copying, processing, reusing, transferring to third parties, for other facilities and purposes

REV. No.	DATE	DESCRIPTION	REV.BY	CHK.BY
01	02.2024	All insert det. corrected	B.Kr	

SUBMITTED FOR | APPROVAL | ✓ | REFERENCE

E.S.Co

EMPLOYER
BHILAI ENGINEERING CORPORATION LIMITED

CONTRACTOR
SE"GIPROKOKS"

DSGN		
DRWN	BK	07.2023
CHECKED	DS	08.2023
APPROVED	DS	08.2023

Coke Oven No.2 Reconstructon.
Coke Oven Battery Foundation
BUTTRESS WALL,
INSERTED ARTICLES

DRG. SIZE A1 | SCALE 1:10 | SHEET 1 of 2 | REV. 01

CONTR. DRG. NO.: | REF. Sh.K-32

PROJECT DRG. NO.: D-ES-CM-CO-11-18-CV-119-I-1